# BOARD OF SUPERVISORS AGENDA ITEM REPORT
# AWARDS / CONTRACTS / GRANTS

○ Award ◉ Contract ○ Grant

**Requested Board Meeting Date:** 10/19/2021

** = Mandatory, information must be provided*

**or Procurement Director Award:** ☐

***Contractor/Vendor Name/Grantor (DBA):**

Green-Tanner Industrial Construction, LLC (Headquarters: Gilbert, AZ)

***Project Title/Description:**

Mike Jacobs Sports Park LED Lighting

***Purpose:**

Award: Contract No. CT-PR-22-099. This award of contract is recommended to the lowest, responsive, responsible bidder in the amount of $1,180,693.00 for a contract term from 10/19/21 to 02/28/22 for the construction of the Mike Jacobs Sports Park LED Lighting Project. Administering Department: Capital Program Office.

***Procurement Method:**

IFB-PO-2200012 was conducted in accordance with A.R.S. § 34-201 and Pima County Procurement Code 11.12.010. Four (4) responsive and responsible bids were received. Due to the limited scope of work, no goal for participation by Small Business Enterprises (SBEs) was established for this project.

Attachments: Notice of Recommendation of Award and Contract.

***Program Goals/Predicted Outcomes:**

Retrofitting the existing six (6) softball fields lighting infrastructure with a new MUSCO LED lighting system.

***Public Benefit:**

The installation of LED lights will substantially lower the electrical service and provide a higher quality overall.

***Metrics Available to Measure Performance:**

The performance will be measured using the contractor evaluation process as outlined in BOS Policy D29.1(E).

***Retroactive:**

No.

TO: COB 10-6-21 (1)
vers.: 1
pgs.: 128

Procure Dept 10/05/21 PM04:05

**THE APPLICABLE SECTION(S) BELOW MUST BE COMPLETED**

**Click or tap the boxes to enter text. If not applicable, indicate "N/A". Make sure to complete mandatory (*) fields**

**Contract / Award Information**

Document Type: CT  Department Code: PR  Contract Number (i.e., 15-123): 22-099

Commencement Date: 10/19/2021  Termination Date: 02/28/2022  Prior Contract Number (Synergen/CMS): _____

☒ Expense Amount $ 1,180,693.00 *  ☐ Revenue Amount: $ _____

***Funding Source(s) required:** Non-Bond-Projects ~~(64%), Parks & Recreation Special Revenue = (36%)~~ JC

Funding from General Fund? ○ Yes ◉ No  If Yes $ _____  % _____

Contract is fully or partially funded with Federal Funds? ○ Yes ◉ No

**If Yes, is the Contract to a vendor or subrecipient?** _____

Were insurance or indemnity clauses modified? JC ◉ Yes ☒ No

*If Yes, attach Risk's approval.*

Vendor is using a Social Security Number? ○ Yes ◉ No

*If Yes, attach the required form per Administrative Procedure 22-10.*

**Amendment / Revised Award Information**

Document Type: _____  Department Code: _____  Contract Number (i.e., 15-123): _____

Amendment No.: _____  AMS Version No.: _____

Commencement Date: _____  New Termination Date: _____

Prior Contract No. (Synergen/CMS): _____

○ Expense ○ Revenue  ○ Increase ○ Decrease  Amount This Amendment: $ _____

Is there revenue included? ○ Yes ○ No  If Yes $ _____

***Funding Source(s) required:** _____

Funding from General Fund? ○ Yes ○ No  If Yes $ _____  % _____

**Grant/Amendment Information** (for grants acceptance and awards)  ○ Award ○ Amendment

Document Type: _____  Department Code: _____  Grant Number (i.e., 15-123): _____

Commencement Date: _____  Termination Date: _____  Amendment Number: _____

☐ Match Amount: $ _____  ☐ Revenue Amount: $ _____

***All Funding Source(s) required:** _____

***Match funding from General Fund?** ○ Yes ○ No  If Yes $ _____  % _____

***Match funding from other sources?** ○ Yes ○ No  If Yes $ _____  % _____

***Funding Source:** _____

***If Federal funds are received, is funding coming directly from the Federal government or passed through other organization(s)?**

_____

Contact: Dawn Dargan Digitally signed by Dawn Dargan DN: cn=Dawn Dargan, o=Pima County, ou=Procurement, email=dawn.dargan@pima.gov, c=US Date: 2021.09.21 14:39:48 -07'00'  Scott Loomis Digitally signed by Scott Loomis Date: 2021.09.21 12:49:54 -07'00'

Department: Procurement Director  Terri Spencer Digitally signed by Terri Spencer Date: 2021.09.21 15:47:44 -07'00'  Telephone: 724-9071

Department Director Signature: Nancy Cole  Date: 9/23/21

Deputy County Administrator Signature: _____  Date: 9/29/2021

County Administrator Signature: _____  Date: 9/29/21

PIMA COUNTY
PROCUREMENT

# NOTICE OF RECOMMENDATION FOR AWARD

Date of Issue: September 16, 2021

The Pima County Capital Program Office hereby issues formal notice to respondents to Solicitation No. IFB-PO-2200012 for the Mike Jacobs Sports Park LED Lighting Project that the following listed respondent will be recommended for award as indicated below. The award action is scheduled to be performed by the Board of Supervisors on or after October 19, 2021.

Award is recommended to the lowest, responsive and responsible bidder.

| AWARDEE NAME | BASE BID | ADDITIVE ALTERNATE 1 | ADDITIVE ALTERNATE 2 | ADDITIVE ALTERNATE 3 | TOTAL BID | AWARD AMOUNT |
|---|---|---|---|---|---|---|
| Green Tanner Industrial Construction | $610,360.00 | $190,111.00 | $190,111.00 | $190,111.00 | $1,180,693.00 | $1,180,693.00 |

| OTHER RESPONDENTS | BASE BID | ADDITIVE ALTERNATE 1 | ADDITIVE ALTERNATE 2 | ADDITIVE ALTERNATE 3 | TOTAL BID |
|---|---|---|---|---|---|
| Sellers and Sons | $615,565.00 | $193,930.00 | $193,930.00 | $193,930.00 | $1,197,355.00 |
| Mountain Power | $632,200.00 | $213,000.00 | $207,400.00 | $207,400.00 | $1,260,000.00 |
| Gilbert Electric | $648,750.00 | $206,650.00 | $206,650.00 | $206,650.00 | $1,268,700.00 |

Engineer's Estimate: $775,000.00

Issued by: Dawn Dargan, Procurement Officer

Telephone Number: (520) 724-9071

This notice is in compliance with Pima County Procurement Code §11.12.010(C) and §11.20.010(C).

Copy to: Pima County SBE via e-mail at SBE@pima.gov.

Rev. 4/27/21

SL

| | |
|---|---|
| **PIMA COUNTY CAPITAL PROGRAM OFFICE** | |
| **PROJECT:** | MIKE JACOBS SPORTS PARK LED LIGHTING |
| **CONTRACTOR:** | Green Tanner Industrial Construction, LLC<br>1330 W Boxwood Avenue<br>Gilbert, AZ 85233 |
| **CONTRACT NO.:** | CT-PR-22-099 |
| **AMOUNT:** | $1,180,693.00 |
| **FUNDING:** | Non-Bond-Projects |

## CONSTRUCTION SERVICES CONTRACT

1. **Parties, Background and Purpose.**

   1.1. Parties. This Contract is entered into between Pima County, a body politic and corporate of the State of Arizona, hereafter called County, and Green Tanner Industrial Construction, LLC, hereinafter called Contractor, and collectively referred to as the Parties.

   1.2. Authority. County requires, consistent with the provisions of A.R.S. Title 34, the services of a Contractor to provide all equipment, labor, and materials required to construct the Mike Jacobs Sports Park LED Lighting ("Project").

   1.3. Solicitation. County previously issued Solicitation No. IFB-PO-2200012 (the Solicitation). Contractor submitted the low responsive, responsible bid in response to the Solicitation for said work and is qualified and willing to provide such services.

2. **Term and Extension/Renewal/Changes.**

   2.1. Initial Term. This Contract, as approved by the Board of Supervisors, commences on October 19, 2021, and terminates on February 28, 2022, unless sooner terminated or further extended pursuant to the provisions of this Contract.

   2.2. Construction Completion. Construction completion time for the work to be performed under this Contract will be **66** working days after the date of Notice to Proceed. Liquidated damages will be assessed based upon the construction completion time after the date of Notice to Proceed.

   2.3. Extension Options. County has the option to extend the contract termination date for purposes of project completion. Any modification or extension of the contract termination date must be by formal written amendment executed by the Parties.

3. **Scope of Services.** Contractor will provide County all labor, materials and equipment necessary to complete the project as described in the Electrical Plans included in the bid documents in Pima County Solicitation No. IFB-PO-2200012 Exhibit B: Scope of Work (80 pages), Exhibit C: General Conditions (9 pages), and other documents incorporated into this contract.

4. **Compensation and Payment.**

   4.1 Compensation. County will pay Contractor as specified.

 SL

4.1.1 Invoices. Contractor will provide detailed documentation in support of requested payment. Contractor must cite the Contract number on all invoices. Payments will be made in accordance with A.R.S. § 34-221.

4.1.1.1 For the period of record retention required under Article 24, County reserves the right to question any payment made under this Article and to require reimbursement by setoff or otherwise for payments determined to be improper or contrary to the Contract or law.

4.1.2 Price. Total payment for this Contract will not exceed $1,180,693.00. Payment for this Contract will be made based on Exhibit A - Bid for Fixed Price Construction Contract (2 pages) submitted by Contractor in response to Solicitation No.IFB-PO-220012 for the Total Bid amount which is comprised of the Base Bid plus Additive Alternate 1, Additive Alternate 2, and Additive Alternate 3.

4.1.3 Work Performed. Contractor will not perform work in excess of the contract amount without prior authorization by an amendment executed by the Parties. Work performed in excess of the contract amount without prior authorization by amendment is at Contractor's own risk.

5. **Insurance**. The Insurance Requirements herein are minimum requirements for this Contract and in no way limit the indemnity covenants contained in this Contract.

5.1. Ratings. Contractor's insurance shall be placed with companies licensed in the State of Arizona and the insureds shall have an "A.M. Best" rating of not less than A- VII. County in no way warrants that the minimum insurer rating is sufficient to protect the Contractor from potential insurer insolvency.

5.2. Insurance Coverages and Limits.

5.2.1. Minimum Scope and Limits of Insurance: Contractor will procure and maintain at its own expense insurance policies (the "Required Insurance") satisfying the below requirements (the "Insurance Requirements") until all of its obligations under this Contract have been met. The below Insurance Requirements are minimum requirements for this Contract and in no way limit Contractor's indemnity obligations under this Contract. County in no way warrants that the required insurance is sufficient to protect the Contractor for liabilities that may arise from or relate to this Contract. If necessary, Contractor may obtain commercial umbrella or excess insurance to satisfy the Insurance Requirements.

5.2.1.1. Commercial General Liability (CGL) – Occurrence Form with limits of $2,000,000 Each Occurrence and $2,000,000 General Aggregate. Policy will include bodily injury, property damage, and broad form contractual liability coverage, personal and advertising injury and products – completed operations.

5.2.1.2. Business Automobile Liability – Bodily Injury and Property Damage for any owned, hired, and/or non-owned automobiles used in the performance of this Contract with a Combined Single Limit (CSL) of $1,000,000 each accident.

5.2.1.3. Workers' Compensation and Employers' Liability - Statutory requirements and benefits for Workers' Compensation. In Arizona, WC coverage is compulsory for employers of one or more employees. Employer's Liability coverage- $1,000,000 each accident and each person - disease.

5.2.1.4. Builder's Risk Insurance – Insurance applies to this contract. Contractor is required to maintain throughout the course of construction Builder's Risk Insurance in a dollar amount equal to the full insurable value under contract, which shall include "All Risk"

coverage. Pima County shall be named as a "Loss Payee". Contractor is responsible for equipment, materials, and supplies until completion of the project and acceptance by County.

5.2.1.5. Claims-Made Coverage. Claim-Made Insurance Coverage - If any part of the Required Insurance is written on a claims-made basis, any policy retroactive date must precede the effective date of this Contract, and Contractor must maintain such coverage for a period of not less than three (3) years following Contract expiration, termination or cancellation.

5.3. Additional Insurance Requirements:

The policies will include, or be endorsed to include, as required by this written agreement, the following provisions:

5.3.1. Additional Insured: The General Liability and Business Automobile Liability Policies shall each be endorsed to include Pima County its departments, districts, boards, commissions, officers, officials, agents, and employees as additional insureds with respect to liability arising out of the activities performed by or on behalf of Contractor.

5.3.2. Subrogation: The General Liability, Business Automobile Liability and Workers' Compensation Policies shall each contain a waiver of subrogation endorsement in favor of County, its departments, districts, boards, commissions, officers, officials, agents, and employees for losses arising from work performed by or on behalf of Contractor.

5.3.3. Primary Insurance: The Contractor's policies shall stipulate that the insurance afforded the Contractor shall be primary and that any insurance carried by County, its agents, officials, or employees shall be excess and not contributory insurance.

5.3.4. Insurance provided by Contractor shall not limit Contractor's liability assumed under the indemnification provisions of this Contract.

5.4. Notice of Cancellation:

Each Required Insurance policy must provide, and certificates specify, County will receive not less than 30 days advance written notice of any policy cancellation, except 10-days prior notice is sufficient when the cancellation is for non-payment of a premium. Notice shall include the County project or contract number and project description.

5.5. Verification of Coverage:

Contractor will furnish County with certificates of insurance as required by this Contract. An authorized representative of the insurer will sign the certificates.

5.5.1. All certificates and endorsements, as required by this Contract, are to be received and approved by County before work commences. Each insurance policy required by this Contract must be in effect at, or prior to, commencement of work under this Contract. Failure to maintain the insurance coverages or policies as required by this Contract, or to provide evidence of renewal, is a material breach of contract.

5.5.2. All certificates required by this Contract shall be sent directly to the appropriate County Department. The Certificate of Insurance shall include County project or contract number and project description on the certificate. County reserves the right to require complete copies of all insurance policies required by this Contract at any time.

5.6. Approval and Modifications:

County's Risk Management Department may approve a modification of the Insurance Requirements without the necessity of a formal Contract amendment, but the approval must be in writing. Neither the County's failure to obtain a required insurance certificate or endorsement, the County's failure to object to a non-complying insurance certificate or endorsement, or the County's receipt of any other information from the Contractor, its insurance broker(s) and/or insurer(s), constitutes a waiver of any of the Insurance Requirements.

6. **Indemnification**.

6.1. To the fullest extent permitted by law, Contractor indemnifies, defends, and holds harmless County its officers, employees and agents from and against any and all suits, actions, legal administrative proceedings, claims or demands and costs attendant thereto, including reasonable attorney's fees and court costs, to the extent caused by any negligent, reckless or intentionally wrongful act or omission of Contractor, its agents, employees or anyone acting under its direction or control or on its behalf in connection with performance of this Contract. The obligations under this Article do not extend to the negligence of County its agents, employees or indemnities.

6.2. All warranty and indemnification obligations under this contract shall survive expiration or termination of the Contract, unless expressly provided otherwise. The Parties agree that any indemnification provision inconsistent with A.R.S. § 34-226 is, in all cases, not void, but will be interpreted and applied as if it were consistent with A.R.S. § 34-226.

6.3. Upon request, Contractor may fully indemnify and hold harmless any private property owner granting a right of entry to Contractor for the purpose of completing the project.

7. **Laws and Regulations**.

7.1. Compliance with Laws. Contractor will comply with all federal, state, and local laws, rules, regulations, standards and Executive Orders, without limitation to those designated within this Contract.

7.2. Choice of Law; Venue. The laws and regulations of the State of Arizona govern the rights of the parties, the performance of this Contract, and any disputes hereunder. Any action relating to this Contract will be brought and maintained in Superior Court in Pima County.

8. **Status of Independent Contractor**. Contractor is an independent Contractor and Contractor is not an employee of County and is not entitled to receive any of the fringe benefits associated with County employment, and will not be subject to the provisions of the County's merit system. Contractor is responsible for payment of all Federal, State and Local taxes associated with the compensation received by Contractor from County. Contractor is responsible for program development and operation without supervision by County.

9. **Contractor/SubContractor Performance**.

9.1. Performance. Contractor will perform the work with the degree of care and skill which a licensed contractor in Arizona would exercise under similar conditions. Contractor will employ suitably trained and skilled personnel to perform all required services under this Contract. Prior to changing any key personnel, especially those key personnel County relied upon in making this Contract, Contractor will obtain County's approval.

9.2. Responsibility. Contractor is responsible for the professional quality, technical accuracy, timely completion, and the coordination of all its effort and other services furnished by Contractor under this Contract. Without additional compensation, Contractor will correct or revise any errors, omissions, or other deficiencies in all products of its efforts and other services provided. This includes resolving any deficiencies arising out of the acts or omissions of Contractor found during or after the course of the

services performed by or for Contractor under this Contract, regardless of County having knowledge of or condoning or accepting the products or the services. Correction of such deficiencies will be at no cost to County.

9.3. SubContractor License. Contractor will ensure that all SubContractors have the appropriate and current license issued by the Arizona Registrar of Contractors for work they perform under this Contract. Contractor will not permit any SubContractor to perform work that does not fall within the scope of the SubContractor's license, except as may be permitted under the rules of the Registrar of Contractors.

9.4. Subcontractor Acts and Omissions. Contractor will be fully responsible for all acts and omissions of its SubContractor(s) and of persons directly or indirectly employed by SubContractor and of persons for whose acts any of them may be liable to the same extent that Contractor is responsible for the acts and omissions of persons directly employed by it. Nothing in this Contract creates any obligation on the part of County to pay any SubContractor, except as may be required by law.

9.5. SubContractor List. Contractor must use the SubContractor's named on Contractor's SubContractor List submitted with the bid. No SubContractor may be added or changed without the prior written approval of County subsequent to review and approval by the Administering Department Director and Procurement Director. Substitution of non-SBE SubContractors may be approved at the discretion of County for reasons including but not limited to, availability, insolvency or any other reason deemed to be in the best interest of County. Approval for substitution of SBE SubContractors that are listed on the Bidders Statement of Proposed SBE Utilization submitted with the bid will only be granted if the provisions of Section 20.28.050 of the Pima County Code have been met.

10. **Assignment.** Contractor will not assign its rights or obligations under this Contract in whole or in part, without County's prior written approval. County may withhold approval at its sole discretion.

11. **Non-Discrimination**. Contractor will comply with all provisions and requirements of Arizona Executive Order 2009-09, which is hereby incorporated into this contract, including flow-down of all provisions and requirements to any SubContractors. During the performance of this Contract, Contractor will not discriminate against any employee, client or any other individual in any way because of that person's age, race, creed, color, religion, sex, disability or national origin.

12. **Americans with Disabilities Act**. Contractor will comply with Title II of the Americans with Disabilities Act (Public Law 110-325, 42 U.S.C. §§ 12101-12213) and the federal regulations for Title II (28 CFR Part 35).

13. **Authority to Contract**. Contractor warrants its right and power to enter into this Contract. If any court or administrative agency determines that County does not have authority to enter into this Contract, County will not be liable to Contractor or any third party by reason of such determination or by reason of this Contract.

14. **Non-Waiver**. The failure of County to insist in any one or more instances upon full and complete compliance with any of the terms and provisions of this Contract or to take any action permitted as a result thereof is not a waiver or relinquishment of the right to insist upon full and complete performance of the same or any other covenant or condition either in the past or in the future. The acceptance by either party of sums less than may be due and owing it at any time is not an accord and satisfaction.

15. **Cancellation for Conflict of Interest**. This Contract is subject to cancellation for conflict of interest pursuant to A.R.S. § 38-511, the pertinent provisions of which are incorporated into this Contract by reference.

16. **Termination of Contract for Default**.

16.1. Upon a failure by Contractor to cure a default under this Contract within 10 days of receipt of notice from County of the default, County may, in its sole discretion, terminate this Contract for default by written notice to Contractor. In this event, County may take over the work and complete it by Contract

or otherwise. Contractor and its sureties, if any, will be liable for any damage to County resulting from Contractor's default, including any increased costs incurred by County in completing the work.

16.2. Default Events. The following constitutes an event of default:

16.2.1. Abandonment of or refusal or failure to prosecute the work or any separable part thereof with the diligence that will insure completion within the time specified in this Contract, including any extension, or a failure to complete the work (or the separable part of the work) within the specified time;

16.2.2. Persistent or repeated refusal or failure to supply enough properly skilled workers or materials to perform the work on schedule;

16.2.3. Failure to provide competent supervision at the site;

16.2.4. Failure to take down, rebuild, repair, alter or amend any defective or deficient work, or to remove any defective or deficient material;

16.2.5. Failure to make prompt payment to SubContractors or suppliers for material or labor;

16.2.6. Loss of Contractor's business or other required license or authority, or any curtailment or cessation for any reason of business or business operations that would substantially impair or preclude Contractor's performance of this Contract;

16.2.7. Disregard of laws, ordinances, or the instructions of County or its representatives, or any otherwise substantial violation of any provision of the Contract; or

16.2.8. If a voluntary or involuntary action for bankruptcy is commenced with respect to Contractor, or Contractor becomes insolvent, makes a general assignment for the benefit of creditors, or has a receiver or liquidator appointed in respect of its assets.

16.3. Termination. In the event of a termination for default:

16.3.1. All finished and unfinished as-builts, shop drawings, documents, data, studies, surveys, drawings, photographs, reports and other information in whatever form, including electronic, acquired or prepared by Contractor for this project become County's property and will be delivered to County not later than five business days after the effective date of the termination;

16.3.2. County may withhold payments to Contractor arising under this or any other Contract for the purpose of set-off until such time as the exact amount of damage due County from Contractor is determined; and

16.3.3. Subject to the immediately preceding subparagraph 16.3.2, County's liability to Contractor will not exceed the reasonable value of work satisfactorily performed prior to the date of termination for which payment has not been previously made.

16.4. Non-Termination. County will not terminate the Contract for default or charge Contractor with damages under this Article if:

16.4.1. Except for subparagraph 16.2.8 in subsection 16.2 above, the event of default or delay in completing the work arises from unforeseeable causes beyond the control and without the fault or negligence of Contractor. Examples of such causes include:

16.4.1.1. Acts of God or of the public enemy,

16.4.1.2. Acts of County in either its sovereign or contractual capacity,

16.4.1.3. Acts of another Contractor in the performance of a contract with County,

16.4.1.4. Fires,

16.4.1.5. Floods,

16.4.1.6. Epidemics,

16.4.1.7. Quarantine restrictions,

16.4.1.8. Strikes,

16.4.1.9. Freight embargoes,

16.4.1.10. Unusually severe weather, or

16.4.1.11. Delays of SubContractors or suppliers at any tier arising from unforeseeable causes beyond the control and without the fault or negligence of both Contractor and the SubContractor(s) or suppliers; and

16.4.2. Contractor, within three days from the beginning of any event of default or delay (unless extended by County), notifies County in writing of the cause(s) therefor. In this circumstance, County will ascertain the facts and the extent of the resulting delay. If, in the judgment of County the findings warrant such action, the time for completing the work may be extended.

16.5. Receipt of Notice. For the purposes of subsection 16.1 above, "receipt of notice" includes receipt by hand by Contractor's onsite project manager, by facsimile transmission, or under the Notices clause of this Contract.

16.6. Excusable. If, after termination of the Contract for default, County determines that the Contractor was not in default, or that the delay was excusable, the rights and obligations of the parties will be the same as if County had terminated the Contract for convenience as set forth in Article 17.

16.7. Rights and Remedies. The rights and remedies of County in this Article are cumulative and in addition to any other rights and remedies provided by law or under this contract.

17. **Termination for Convenience of County**. County may terminate this Contract at any time by giving written notice to Contractor of such termination and specifying the effective date thereof, at least 15 days before the effective date of such termination. In that event, all finished or unfinished documents and other materials will, at the option of County, become its property. If County terminates the Contract as provided herein, County will pay Contractor an amount based on the time and expenses incurred by Contractor prior to the termination date. However, County will make no payment for anticipated profit on unperformed services.

18. **Non-Appropriation of Funds**. Notwithstanding any other provision in this Contract, County may terminate this Contract if for any reason the Pima County Board of Supervisors does not appropriate sufficient monies for the purpose of maintaining this Contract. In the event of such termination, County has no further obligation to Contractor, other than payment for services rendered prior to termination.

19. **Notices**. Any notice required or permitted to be given under this Contract must be in writing and be served by delivery or by certified mail upon the other party as follows:

COUNTY:
Nancy Cole, Director
Capital Program Office
201 North Stone Avenue
Tucson, Arizona 85701
Tel: (520) 724-612

CONTRACTOR:
Russ Carr, Business Unit Manager
Green Tanner Industrial Construction
1330 West Boxwood Ave.
Gilbert, AZ 85233
Tel: (480) 982-0695

20. **Non-Exclusive Contract**. Contractor understands that this Contract is Non-Exclusive and is for the sole convenience of County. County reserves the right to obtain like services from other sources for any reason.

21. **Contract Documents**.

    21.1. Incorporation of Documents: County and Contractor in entering into this Contract have relied upon information provided in Solicitation No.IFB-PO-2200012- Mike Jacobs Sports Park LED Lighting, Bonds (Bid, Payment, and Performance Bonds), Exhibit A – Bid Schedule or Bid for Fixed Price Construction Contract, Exhibit B – Scope of Work, Exhibit C – General Conditions, Special Provisions, Technical Specifications and Plans, Construction Documents, Drawings and Specifications, Amendments, and on information provided in Contractor's response to this Solicitation. These documents are hereby incorporated into and made a part of this Contract by reference as if set forth in full herein.

    21.2. Order of Precedence: In the event of a conflict or inconsistency between or among the contract documents, the documents shall take precedence in the following order:

    21.2.1. This Contract
    21.2.2. Exhibit B – Scope of Work
    21.2.3. Exhibit C – General Conditions
    21.2.4. Special Provisions, Technical Specifications, and Plans
    21.2.5. Contractor Response to the Solicitation
    21.2.6. Instructions to Bidders
    21.2.7. Invitation to Bid

    21.3. Deviation: The parties may, by written mutual agreement, deviate from this order of precedence in resolving inconsistencies between or among contract documents. Any such agreement interpreting the documents shall be incorporated into the Contract by amendment.

    21.4. Conflict: In the event of any conflict between any provision in the Special Conditions, and any provision of the General Conditions, or any other incorporated document, the provision in the Special Conditions shall take precedence.

22. **Bonding Requirements**. In accordance with A.R.S. §34-221, et. seq., the Contractor will provide Payment and Performance bonds for not less than 100% of the contract amount. Copies of the bonds will be attached to this Contract.

23. **Ownership of Documents**. Ownership of all original drawings, boring logs, field data, estimates, field notes, plans, specifications, documents, reports, calculations, maps and models, and other information developed by Contractor under this Contract vests in and become the property of the County and will be delivered to County upon completion or termination of the services, but Contractor may retain record copies thereof.

24. **Books and Records**.

    24.1. Maintenance. Contractor will keep and maintain proper and complete books, records and accounts, which will be open at all reasonable times for inspection and audit by duly authorized representatives of County.

24.2. Retention. Contractor will retain all records relating to this contract at least five years after its termination or cancellation or until any related pending proceeding or litigation has been closed, if later. Alternatively, Contractor may, at its option, deliver such records to County for retention.

25. **Remedies**. Either party may pursue any remedies provided by law for the breach of this Contract, provided, however, that the procedures in Article 28 are first exhausted. No right or remedy is intended to be exclusive of any other right or remedy and each is cumulative and in addition to any other right or remedy existing at law or at equity or by virtue of this Contract.

26. **Severability**. Each provision of this Contract stands alone, and any provision of this Contract found to be prohibited by law is ineffective to the extent of such prohibition without invalidating the remainder of this Contract.

27. **Delays**. Neither party will be considered in default in the performance of its obligations to the extent that the performance of any such obligation is prevented or delayed by any cause, existing or future, which is beyond the reasonable control of such party.

28. **Disputes**.

28.1. Resolving Dispute. In the event of a dispute between County and Contractor regarding any part of this Contract or the Parties' obligations or performance hereunder, either party may request a special meeting between their respective representatives to resolve the dispute. If the dispute remains unresolved, then either Party may request escalation of the issue to a meeting between the Director of the Pima County Department administering this Contract and Contractor's counterpart official, such meeting to be held within one week of the request, unless otherwise agreed. If the dispute is still not resolved after that meeting, then either party may pursue such remedy or remedies as may be available to them under the laws of the State of Arizona.

28.2. Performance. The Parties will continue performance of their respective obligations under this Contract notwithstanding the existence of any dispute.

29. **Public Records**.

29.1. Disclosure. Pursuant to A.R.S. § 39-121 et seq., and A.R.S. §§ 34-603(H), 604(H), in the case of Construction or Architectural and Engineering services procured under A.R.S.,Title 34, Chapter 6, all information submitted by Contractor in any way related to this contract, including, but not limited to, pricing, product specifications, work plans, and any supporting data becomes public information and upon request, is subject to release and/or review by the general public including competitors.

29.2. Records Marked Confidential.

29.2.1. Any information submitted related to this Contract that Contractor believes constitutes proprietary, trade secret or otherwise confidential information must be appropriately and prominently marked as confidential prior to submittal to County and be accompanied by an index specifically identifying and describing the general contents of each page so marked. The index is a Public Record and must not include any information considered confidential.

29.2.2. Notwithstanding the above provisions, in the event records marked confidential are requested for public release pursuant to A.R.S. § 39-121 et seq., County will release records marked confidential 10 business days after the date of notice to the Contractor of the request for release, unless Contractor has, within the 10 day period, secured a protective order, injunctive relief or other appropriate order from a court of competent jurisdiction in Arizona, enjoining the release of the records. For the purposes of this paragraph, the day of the request for release is not counted in the time calculation. Contractor will be notified of any request for such release

on the same day of the request for public release or as soon thereafter as practicable. County shall not, under any circumstances, be responsible for securing a protective order or other relief enjoining the release of records marked confidential, nor shall County be in any way financially responsible for any costs associated with securing such an order.

30. **Legal Arizona Workers Act Compliance**.

30.1. Compliance with Immigration Laws. Contractor warrants that it will at all times during the term of this Contract comply with all federal immigration laws applicable to Contractor's employment of its employees, and with the requirements of A.R.S. § 23-214 (A) (together the "State and Federal Immigration Laws"). Contractor will further ensure that each SubContractor who performs any work for Contractor under this Contract likewise complies with the State and Federal Immigration Laws.

30.2. Books & Records. County has the right at any time to inspect the books and records of Contractor and any SubContractor in order to verify such party's compliance with the State and Federal Immigration Laws.

30.3. Remedies for Breach of Warranty. Any breach of Contractor's or any SubContractor's warranty of compliance with the State and Federal Immigration Laws, or of any other provision of this section, is a material breach of this Contract subjecting Contractor to penalties up to and including suspension or termination of this Contract. If the breach is by a SubContractor, and the subcontract is suspended or terminated as a result, Contractor will take such steps as may be necessary to either self-perform the services that would have been provided under the subcontract or to retain a replacement SubContractor (subject to County approval if SBE or DBE preferences apply), as soon as possible so as not to delay project completion.

30.4. SubContractors. Contractor will advise each SubContractor of County's rights, and the SubContractor's obligations, under this Article by including a provision in each subcontract substantially in the following form:

"SubContractor hereby warrants that it will at all times during the term of this contract comply with all federal immigration laws applicable to SubContractor's employees, and with the requirements of A.R.S. § 23-214 (A). SubContractor further agrees that County may inspect the SubContractor's books and records to ensure that Contractor is in compliance with these requirements. Any breach of this paragraph by SubContractor is a material breach of this contract subjecting SubContractor to penalties up to and including suspension or termination of this contract."

30.5. Costs. Any additional costs attributable directly or indirectly to remedial action under this Article are the responsibility of Contractor. In the event that remedial action under this Article results in delay to one or more tasks on the critical path of Contractor's approved construction or critical milestones schedule, such period of delay will be excusable delay for which Contractor is entitled to an extension of time, but not costs.

31. **Israel Boycott Certification**. Pursuant to A.R.S. § 35-393.01, if Contractor engages in for-profit activity and has 10 or more employees, and if this Contract has a value of $100,000.00 or more, Contractor certifies it is not currently engaged in, and agrees for the duration of this Contract to not engage in, a boycott of goods or services from Israel. This certification does not apply to a boycott prohibited by 50 U.S.C. § 4842 or a regulation issued pursuant to 50 U.S.C. § 4842.

32. **Amendment**. Except for the amendment provision above in Article 2, this Contract may be modified, amended, altered or extended only by a written amendment signed by the Parties.

33. **Entire Agreement**. This document constitutes the entire agreement between the Parties and all prior or contemporaneous agreements and understandings, oral or written, are hereby superseded and merged herein.

34. **Effectiveness and Date.** This contract will become effective when all Parties have signed it. The date of this Contract will be the date the Contract is signed by the last Party to sign it (as indicated by the date associated with that Party's signature).

Each Party is signing this Contract on the date below that Party's signature.

APPROVED:

_____
Chair, Board of Supervisors

_____
Date

CONTRACTOR:

_____
Signature

Russell L. Carr Business Unit Manager
Name and Title (Please Print)

10/04/2021
Date

ATTEST:

_____

Clerk of the Board

APPROVED AS TO FORM:

_____
Deputy County Attorney

Stacey Roseberry
Name (Please Print)

9/28/2021
Date

PIMA COUNTY

# EXHIBIT A BID FOR FIXED PRICE CONSTRUCTION CONTRACT (2 Pages)

## IFB-PO-2200012
## MIKE JACOBS SPORTS PARK LED LIGHTING

**BID OF:** Green Tanner Industrial Construction, LLC
(CONTRACTOR'S NAME)

The undersigned bidder has carefully examined the Bid Documents for the **IFB-PO-2200012 Mike Jacobs Sports Park LED Lightning** project, and will provide all necessary machinery, tools, apparatus, and other means of construction and do all the work and furnish all material called for by this Contract, including the Plans incorporated herein, and in accordance with the requirements of the Pima County Capital Program Office.

The undersigned bidder understands that the quantity of work for the base bid amount as shown herein shall be a fixed not-to-exceed amount, complete in place.

**BASE BID**:
Bidder agrees to perform all of the necessary work described in these specification and as shown on the drawings for the fixed price of:

Six-Hundred and ten-thousand, three-hundred sixty **DOLLARS** ($ 610,360.00 )
(Written Base Bid Amount)

**ADDITIVE ALTERNATE #1:** $ 190,111.00
**(Field 6)**

**ADDITIVE ALTERNATE #2:** $ 190,111.00
**(Field 4)**

**ADDITIVE ALTERNATE #3:** $ 190,111.00
**(Field 5)**

**TOTAL BID:** $ 1,180,693.00

The prices are to include the furnishing of all materials, plant, equipment, tools, scaffolds, and all other facilities, all applicable taxes, insurance and bonds, and the performance of all labor and services necessary for proper completion of the work.

**PAGE 1 OF 2**

BIDDER SHALL SIGNIFY RECEIPT OF AMENDMENT(S) (IF ANY). Any bid that fails to acknowledge any amendment that directly affects cost, scope or schedule will be rejected as nonresponsive.

| Amendment # | By (Bidder Initials) | Date | Amendment # | By (Bidder Initials) | Date |
|---|---|---|---|---|---|
| 1 | RL | 8/27/21 | | | |
| 2 | RL | 9/2/21 | | | |
| 3 | RL | 9/7/21 | | | |

BIDDER HEREBY CERTIFIES that it has not, either directly or indirectly, entered into any agreement, participated in any collusion, or otherwise taken any action in restraint of free competitive bidding in connection with this bid.

SIGNATURE: [signature] DATE: 9/13/21

PRINTED NAME & TITLE: Russ Carr - Business Unit Manager

LEGAL COMPANY NAME: Green Tanner Industrial Construction, LLC

TELEPHONE NO.: ( 480 ) 982-0695 EMAIL: rcarr@greentanner.com

CORPORATE HEADQUARTERS (CITY, STATE) Gilbert, Arizona

ARIZONA CONTRACTOR'S LICENSE NUMBER: 311625 CLASS: Roc#A-17 Electrical and T-Lines

ARIZONA CONTRACTOR'S LICENSE NUMBER: 295789 CLASS: Roc# CR11 Electrical

**PAGE 2 OF 2**

***(The remainder of this page intentionally left blank)***

# **EXHIBIT B – SCOPE OF WORK** (80 pages including attachments)

**PROJECT BACKGROUND:**

Mike Jacobs Sports Park is a multi-sports facility located in Marana that includes 6 softball fields, 4 beach volleyball courts, 1 multi-use field, concession stands, a playground, and restrooms. The Parki s equipped with field lighting that offers Tucson, Pima County, and Marana resident's the ability toplay night games or tournaments for their year round adult and youth leagues.

**PROJECT DESCRIPTION:**

Pima County Natural Resources, Parks & Recreation (NRPR) intends to upgrade the existing field lighting systems with new efficient LED lights. The parks antiquated lighting system exceeds the medium general service rate provided by Tucson Electric (TEP) placing the park under a higher service rate.The installation of LED lights will substantially lower the electrical service and provide a higher quality overall.

**PROJECT SCOPE:**
Scope of work consists of retrofitting the existing (6) softball fields lighting infrastructure with new MUSCO LED lighting system. This will include removing the exiting Metal Haloid pole top luminaire assembly and control pane located at each Musco Pole and installing new diode lighting pole top assembly per Musco installation instructions (Diode Light Source-LED).

Add alternates have been identified for the project and may be phased in if is beneficial and cost effective to replace all field lighting during the initial phase.

**PROJECT SPECIFICATIONS:**

1. Engineering and Permits:
    - Development Services (DSD) Building Permit(s) to be provided by Capital Program Office (CPO)
        - Outdoor lighting code requirements.
    - Electrical plans
        - Existing as-builts (Sports Field Lighting, July 22, 2008)
        - Per Manufacturers (Musco) installation instructions
            1. LED Retrofit Installation Guide
            2. Equipment List/Illumination Summary
    - A SWPPP plan is not required; however, please use best practices

2. Inspection & Reporting:
    - DSD Permit inspections to be coordinated by Contractor.
    - Special inspections that are required shall be performed by Pima County approved Arizona Licensed Inspections Engineer selected by the contractor.

3. Demolition and Removal:
    - All demolition & disposal of refuse that may be a product of the project will be the responsibility of the Contractor.
    - Metal Haloid lighting to be salvaged and stored per Pima County NRPR
        - Location TBD by Parks.

4. Additional Conditions:
    - Blue Stake shall locate utilities prior to construction, coordination by Contractor. AZ811 (Blue Stake) shall locate utilities prior to construction, coordination byContractor. The contractor must also contact NRPR with 48 hours advance notice forBlue Staking request to locate internal distribution lines.

- Coordinate construction activates, site access, location of underground site utilities, and temporary utility connections to the Park's Facility Personnel.
  - POC – Martina Gonzalez P# 520-419-2369
- During construction, the contractor shall secure the area affected by construction activities by reasonable means such as construction fencing or barricades. At each construction day's end, any open excavation or missing pavement shall be covered and clearly barricaded to avoid safety conflicts with constituents.
- Numerous incidents of property crime have occurred in the project area and the Contractor is advised not to leave any materials or equipment unsecured.
- Restroom facilities for use by construction crew members shall be the responsibility of the contractor.
- Clearing, compaction, excavation, grading, and sub-grade preparation shall be according to the latest version of PAG Standard Specifications for Public Improvements. None anticipated for this project.
- All work to be completed according to latest edition of PC NRPR Park Standardsand Specifications.
- All work to be completed according to latest version of PAG Standards and Specifications for public improvements.
- Dust abatement shall be implemented according to Pima County codes. Waterrequirements during the course of construction shall be the responsibility of the contractor.
- At the conclusion of the project, Contractor shall leave site in clean, safe condition. Disposal of all waste materials shall be by Contractor.

5. Access:
   - Staging and accessibility to be designated during preconstruction meeting.

6. Additional Items:
   - Musco LED Retrofit Installation Guide
     - Diode Light Source – LED Installation Instructions
   - Electrical Leakage assessment of the (6) softball fields performed May 26, 2021. Assessment included visual observation of the electrical distribution equipment forthe fields and current leakage testing of (48) sports field pole light branch circuits. Tests were performed in the Musco contactor cabinets.
     - No observed deficiencies in the 2008 equipment
   - Due to ongoing event scheduling, it is critical to coordinate construction activitiesduring the duration of the project.
     - Completion of Field #1 required prior to starting on Field #2.
     - Completion of Field #2 required prior to starting on Field #3.

7. Construction Schedule
   Include a construction schedule of your projected construction improvements for each of theproject tasks, beginning with your anticipated start date upon receiving a bid award. Please note all work must be completed by **January 31, 2022**.

8. Control System:
   - Provide labor, equipment, and materials to install Musco Control and Monitoring cabinet(s) and terminate all necessary wiring.
   - Provide a dedicated 120 V 20 A controls circuit or a step-down transformer for 120 V control circuit if not available.
   - Check all zones to make sure they work in both auto and manual mode.
   - Commission Control-Link® by contacting Control-Link Central™ at 877-347-3319.

**PROJECT MAP:** 6901 N. Casa Grande Highway, Tucson, AZ 85743.

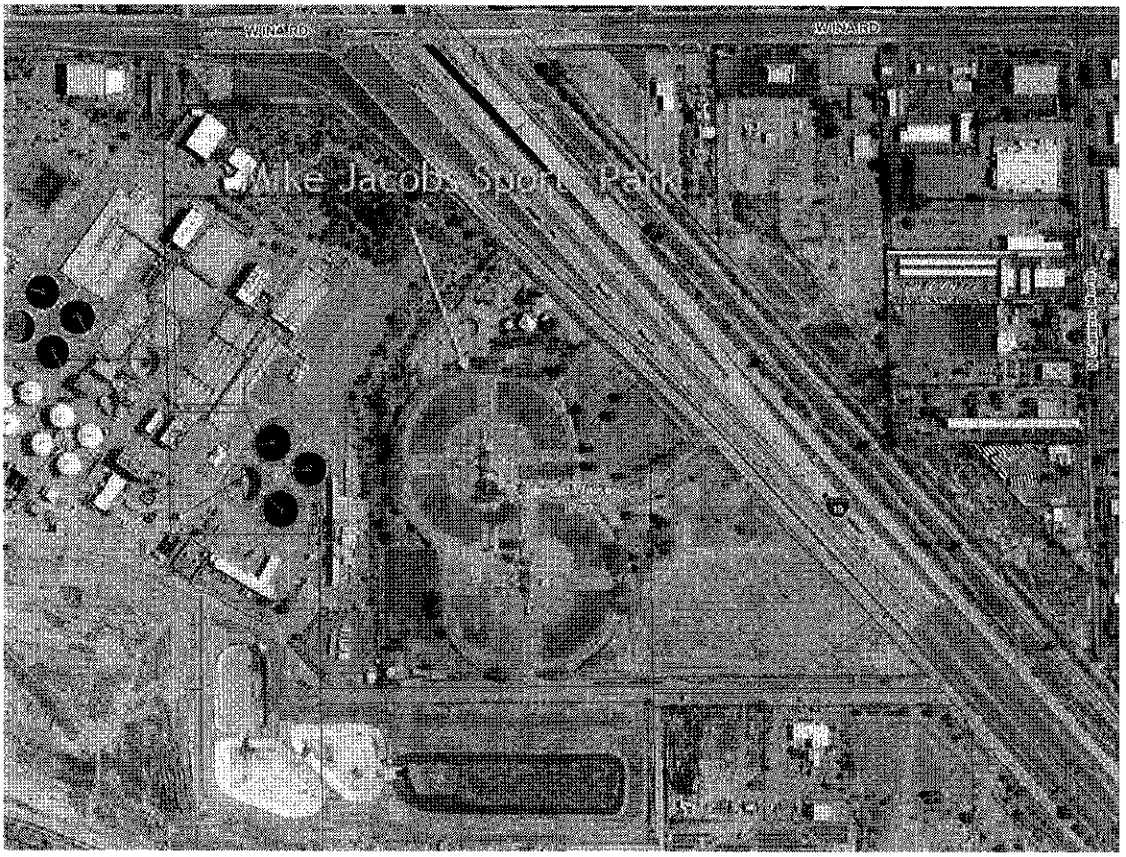

EXHIBIT B - ATTACHMENT 1 - ELECTRICAL PLANS (77 pages)

# SPORTS FIELD LIGHTING
# SPORTS PARK AND BRANDI FENTON MEMORIAL PARK
# TUCSON, ARIZONA
# JULY 22, 2008

## C I T Y  O F  T U C S O N

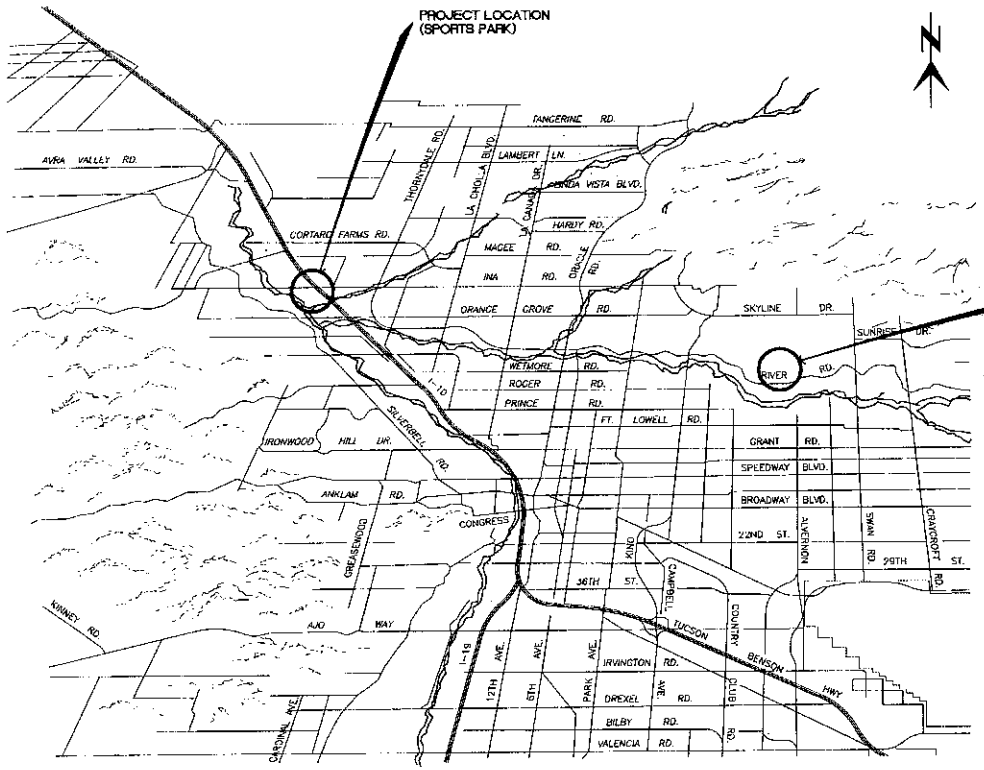


SHEET INDEX


| | |
|---|---|
| ESP0.0 | COVER SHEET |
| ESP0.1 | SYMBOLS AND ABBREVIATIONS |
| ESP1.0 | EXISTING SPORTS PARK OVERALL SITE PLAN |
| ESP2.0 | NEW SPORTS PARK LIGHTING PLAN |
| ESP2.1 | SPORTS PARK CONDUIT PLAN |
| ESP3.0 | SINGLE LINE DIAGRAM - EXISTING |
| ESP4.0 | SINGLE LINE DIAGRAM - NEW |
| ESP5.0 | PANEL SCHEDULES |
| S-1 | GENERAL STRUCTURAL NOTES/DETAILS |
| EBF1.0 | OVERALL SITE PLAN |
| EBF2.0 | SOCCER FIELD LIGHTING |
| EBF3.0 | PANEL SCHEDULES AND SINGLE LINE |
| S-1 | GENERAL STRUCTURAL NOTES/DETAILS |


**RECORD DRAWINGS:**
DRAWINGS ISSUED BY R.A. ALCALA & ASSOCIATES, INC. (RAAI). UPON THE COMPLETION OF ELECTRICAL CONSTRUCTION, THESE DRAWINGS ARE BASED UPON THE MARKED UP DRAWINGS AND OTHER DATA FURNISHED TO RAAI BY THE ELECTRICAL CONTRACTOR ON AUG. 4, 2009, SHOWING SIGNIFICANT CHANGES IN THE INSTALLATION MADE DURING CONSTRUCTION. RAAI MAKES NO WARRANTY OF THE ACCURACY OR COMPLETENESS OF THE DRAWINGS.

PIMA COUNTY COMMUNITY RESOURCES

APPROVED: _____

APPROVED: _____

APPROVED: _____

APPROVED: _____

| | |
|---|---|
| POWER COMPANY: | TUCSON ELECTRIC POWER COMPANY |
| REPRESENTATIVE: | WARREN MOLITOR (BRANDI FENTON) |
| TELEPHONE NO.: | (520) 918-8266 |
| ADDRESS: | TUCSON, AZ |
| REPRESENTATIVE: | CHUCK LUSK (SPORTS PARK) |
| TELEPHONE NO.: | (520) 513-8787 |
| TELEPHONE COMPANY: | - |
| REPRESENTATIVE: | - |
| TELEPHONE NO.: | (520) 884-2630 |
| ADDRESS: | 2550 N. BRANDON DR. STE. 150 TUCSON, AZ |

THE ELECTRICAL CONTRACTOR IS RESPONSIBLE FOR COORDINATION AND COMPLIANCE WITH THE VARIOUS UTILITY COMPANY REQUIREMENTS. WITHIN TWO WEEKS AFTER AWARD OF CONTRACT, SUBMIT (2) COMPLETE SETS OF PLANS, INCLUDING PLAN OF SURVEY, TO UTILITY COMPANIES FOR COORDINATION. REQUIRED OF INCOMING POWER AND TELEPHONE SERVICES SHOWN ARE FOR ESTIMATING PURPOSES ONLY. ACTUAL HOUSING, CONDUIT, TRENCH AND PAD REQUIREMENTS SHALL BE AS SPECIFIED BY THE UTILITY COMPANIES. CONFIRM ALL REQUIREMENTS WITH UTILITIES PRIOR TO INSTALLATION. CONTRACTOR SHALL RETAIN THE SERVICES OF AN ENGINEERING SURVEY TO PREPARE THE LEGAL DESCRIPTIONS OF THE INCOMING UTILITIES AS REQUIRED BY THE RESPECTIVE UTILITY COMPANIES.

BASE BID

CALL TOLL FREE BEFORE YOU DIG
800-782-5348
Blue Stake Center
Dial 811 Direct

PIMA ACTIVITY NO.S P08CP05600 AND P08CP05602

SPORTS FIELD LIGHTING PROJECT
SOCCER FIELD LIGHTING
BRANDI FENTON MEMORIAL PARK

COVER SHEET


RAA LCALA & Associates, Inc.
consulting electrical engineering
2560 N. Coyote Dr., Suite 103
Tucson, Az. 85745
(520) 623-7773


14857 ROBERT A. ALCALA
EXPIRES 3/31/2011

PROJ. NO: 08027
DATE: 07/22/08
DESIGNED BY: RAA2
CHECKED BY: RAA
DRAWN BY: AR
REVISIONS:
1 AS BUILT CHANGES 8/7/09

ESP0.0

# ELECTRICAL SYMBOLS AND ABBREVIATIONS LIST

| SYMBOL | DESCRIPTION | MTG. HEIGHT |
|---|---|---|
| $A_2$ | LETTER INDICATES LUMINAIRE TYPE, NUMBER INDICATES BRANCH CIRCUIT | |
| | FLUORESCENT LUMINAIRE – RECESSED | |
| | FLUORESCENT LUMINAIRE – SURFACE MOUNTED | |
| | FLUORESCENT LUMINAIRE – PENDANT MOUNTED | |
| | INCANDESCENT, HID, OR PL LUMINAIRE (SURFACE MOUNTED) – ARROW INDICATES AIMING OF DIRECTIONAL, ACCENT OR WALL WASH LUMINAIRE | |
| | INCANDESCENT, HID, OR PL LUMINAIRE (RECESSED) – ARROW INDICATES AIMING OF DIRECTIONAL, ACCENT OR WALL WASH LUMINAIRE | |
| | WALL MOUNTED LUMINAIRE | |
| | EXIT LIGHT, DIRECTIONAL ARROWS AS INDICATED, SHADING INDICATES FACE | |
| | EMERGENCY LIGHT WITH BATTERY PACK AND 2 LAMP HEADS – SURFACE MOUNTED | |
| | LIGHT TRACK WITH LUMINAIRES AS INDICATED | |
| | SPORTS LIGHTING, NUMBER OF LUMINAIRES SHOWN INDICATES LUMINAIRES MOUNTED ON THAT POLE | |
| $S_D$ | SPST TOGGLE SWITCH – LOWER CASE LETTER INDICATES FIXTURES SWITCHED | 48" TO TOP |
| $S_3$ | THREE-WAY TOGGLE SWITCH | |
| $S_L$ | SPST TOGGLE SWITCH WITH LIGHTED HANDLE | |
| $S_M$ | MANUAL MOTOR STARTER SWITCH WITH OVERLOAD ELEMENT(S) – SIZE AS REQUIRED | |
| $S_D$ | DIMMER SWITCH (WATTAGE AS REQUIRED) – "LV" INDICATES LOW VOLTAGE | |
| | TIME CLOCK FOR LIGHTING CONTROL | |
| | DUPLEX GROUNDED RECEPTACLE | 12" TO BOTTOM |
| | DUPLEX GROUNDED RECEPTACLE – SPLIT WIRED | |
| | DUPLEX RECEPTACLE MOUNTED HORIZONTAL | |
| | QUADRAPLEX GROUNDED CONVENIENCE RECEPTACLE | |
| | FLUSH MOUNTED DUPLEX FLOOR RECEPTACLE. CONTRACTOR SHALL MARK PROPOSED LOCATION IN FIELD AND COORDINATE EXACT FINAL LOCATION WITH ARCHITECT PRIOR TO ANY ROUGH-IN. | |
| | 208 OR 240 VOLT SINGLE PHASE RECEPTACLE | |
| | DISCONNECT SWITCH – SIZE, VOLTAGE AND NUMBER OF POLES AS NOTED OR AS REQUIRED | |
| $2$ | MOTOR STARTER – NUMBER INDICATES SIZE, SHADED QUADRANT INDICATES FURNISHED WITH EQUIPMENT | |
| | COMBINATION STARTER AND FUSED DISCONNECT SWITCH | |
| | ELECTRICAL BRANCH CIRCUIT PANELBOARD – SURFACE MOUNT SEE PANEL SCHEDULE DRAWING FOR ADDITIONAL INFORMATION | 72" TO TOP |
| | ELECTRICAL BRANCH CIRCUIT PANELBOARD – RECESSED SEE PANEL SCHEDULE DRAWING FOR ADDITIONAL INFORMATION | |
| | TELEPHONE JACK | |
| V | FLUSH MOUNTED FLOOR TELEPHONE OUTLET – COORDINATE EXACT FINAL LOCATION WITH ARCHITECT IN FIELD DATA | |

| SYMBOL | DESCRIPTION | MTG. HEIGHT |
|---|---|---|
| | TELE/DATA OUTLET | 12" TO BOTTOM |
| | CABLE TELEVISION OUTLET | |
| | MOTION DETECTOR | |
| F | FIRE ALARM MANUAL PULL STATION | 48" TO TOP |
| FB | FIRE ALARM BELL | |
| FH | FIRE ALARM HORN | |
| FS | FIRE ALARM STROBE LIGHT | |
| FH | FIRE ALARM COMBINATION HORN/STROBE | |
| | SMOKE DETECTOR | |
| H | HEAT DETECTOR | |
| D | DUCT TYPE SMOKE DETECTOR | |
| R | 135 DEGREE F. RATE OF RISE HEAT DETECTOR | |
| T | SPRINKLER SYSTEM TAMPER SWITCH | |
| F | SPRINKLER SYSTEM FLOW SWITCH | |
| 1 | KEY NOTE – NUMBER AS INDICATED | |
| UG | DASHED INDICATES EXISTING DEVICES | |
| | BRANCH CIRCUIT HOME RUN TO PANELBOARD (PANELBOARD AND CIRCUITS AS NOTED) | |
| J | ACCESSIBLE JUNCTION BOX – SIZE AS REQUIRED | |
| —OHP— | OVERHEAD PRIMARY | |
| —UGL— | UNDERGROUND ELECTRICAL | |
| —OHT— | OVERHEAD TELEPHONE LINE | |
| —UGT— | UNDERGROUND TELEPHONE LINE | |
| —OHS— | OVERHEAD SECONDARY | |
| —UGS— | UNDERGROUND SECONDARY | |

| SYMBOL | DESCRIPTION |
|---|---|
| AFF | ABOVE FINISHED FLOOR |
| AFG | ABOVE FINISHED GRADE |
| AIC | AMPS INTERRUPTING CAPACITY, RMS SYMMETRICAL |
| CATV | COMMUNITY ACCESS TELEVISION |
| CCTV | CLOSED CIRCUIT TELEVISION |
| (E), EXTG | EXISTING |
| G, GND, GRD | GROUND |
| GFCI | GROUND FAULT CIRCUIT INTERRUPTER |
| NL | NIGHT LIGHT |
| NIC | NOT IN CONTRACT |
| OFCI | OWNER FURNISHED, CONTRACTOR INSTALLED |
| OH | OVERHEAD |
| PNL | PANELBOARD |
| S F | FUSESTAT HOLDER |
| TTB | TELEPHONE TERMINAL BOARD |
| UG | UNDERGROUND |
| UON | UNLESS OTHERWISE NOTED |
| WP | WEATHERPROOF |
| XFMR | TRANSFORMER |

## GENERAL NOTE

NOT ALL SYMBOLS AND ABBREVIATIONS INDICATED ARE NECESSARILY APPLICABLE TO THIS PROJECT.

## SPECIAL CULTURAL RESOURCES REQUIREMENTS

A. THE CONSTRUCTION PROJECT IS SUBJECT TO STATE AND COUNTY CULTURAL RESOURCES REQUIREMENTS, AND ARCHALOLOGICAL MONITORING IS REQUIRED FOR ALL GROUND-DISTURBING ACTIONS RELATED TO THE LIGHTING CONSTRUCTION.

B. THE CONSTRUCTION CONTRACTOR WILL COORDINATE SCHEDULING WITH THE ARCHAEOLOGICAL CONSULTANT AND THE PIMA COUNTY CULTURAL RESOURCES OFFICE TO ENSURE THAT AN ARCHAEOLOGICAL MONITOR IS PRESENT DURING ALL GROUND-DISTURBING CONSTRUCTION.

C. THE CONSTRUCTION PROJECT IS SUBJECT TO STATE BURIAL PROTECTION LAW (A.R.S. 41-844) AND IN THE EVENT OF ARCHAEOLOGICAL DISCOVERIES, THE ARCHAEOLOGICAL MONITOR WILL IMPLEMENT THE REQUIREMENTS OF THE LAW.

D. THE ARCHAEOLOGICAL CONSULTANT REQUESTS THAT ELECTRICAL CONDUIT TRENCHING IN THE VICINITY OF A KNOWN ARCHAEOLOGICAL SITE ON THE WEST SIDE OF SPORTSPARK BE DONE EARLY IN THE CONSTRUCTION PROJECT. THE ARCHAEOLOGISTS WILL WORK WITH THE CONTRACTOR TO IDENTIFY THIS AREA. THE TRENCHING WILL BE MONITORED, AND IF AN ARCHAEOLOGICAL DISCOVERY IS MADE, THIS WILL ALLOW TIME TO MITIGATE THE CULTURAL REMAINS THROUGH LIMITED DATA RECOVERY.

## OUTDOOR LIGHTING CALCULATION
## PIMA COUNTY SPORTS PARK

THE OUTDOOR LIGHTING CALCULATION IS IN ADHERENCE WITH THE 2006 PIMA COUNTY OUTDOOR LIGHTING CODE, EDITION 2006-91, EXHIBIT H, CHAPTER 6.

1. PROJECT IS IN LIGHTING AREA E3
2. SITE IS ZONED FOR COMMERCIAL (OPTION 2).
3. ALL NEW LUMINAIRES ARE FULL CUT OFF.
4. ALLOWABLE UNSHIELDED LUMENS PER TABLE 401.1, E3 COMMERCIAL (OPTION 2) (300,000 LUMENS PER ACRE)
5. TOTAL ACRES FOR THIS PROJECT SITE IS 32 ACRES.
6. 300,000 LUMENS x 32 ACRE = 9,600,000 TOTAL ALLOWABLE LUMENS.
7. OUTDOOR LUMINAIRES USED THIS PROJECT.

| TYPE | QUANTITY | LAMP | LUMENS/LAMP | TOTAL LUMENS |
|---|---|---|---|---|
| 6 FIELDS | 180 | 1500W HPS | 130,000 | = 23,400,000 |
| | | | TOTAL | 23,400,000 |

8. 23,400,000 TOTAL LUMENS.
9. LINE 8 IS LESS THAN LINE 6. (N/A).
10. SPORTS FIELD LIGHTING EXEMPT PER SECTION 601.2 AND 601.3.

**RECORD DRAWINGS:**

DRAWINGS ISSUED BY R.A. ALCALA & ASSOCIATES, INC. (RAAI). UPON THE COMPLETION OF ELECTRICAL CONSTRUCTION, THESE DRAWINGS ARE BASED UPON THE MARKED UP DRAWINGS AND OTHER DATA FURNISHED TO RAAI BY THE ELECTRICAL CONTRACTOR ON AUG. 4, 2009, SHOWING SIGNIFICANT CHANGES IN THE INSTALLATION MADE DURING CONSTRUCTION. RAAI MAKES NO WARRANTY OF THE ACCURACY OR COMPLETENESS OF THE DRAWINGS.

BASE BID

CALL 48 HOURS BEFORE YOU DIG
800-782-5348

SPORTS FIELD LIGHTING PROJECT
SOCCER FIELD LIGHTING
BRANDI FENTON MEMORIAL PARK

SYMBOLS AND ABBREVIATIONS

RAALCALA & Associates, Inc.
consulting electrical engineering
2560 N. Coyote Dr., Suite 103
Tucson, AZ. 85745
(520) 623-7773

EXPIRES 6/30/2011

PROJ. NO: 08027
DATE: 07/22/08
DESIGNED BY: RAA2
CHECKED BY: RAA
DRAWN BY: AR
REVISIONS:
1 P.C. REVIEW COMMENTS OF 8/1/08
2 AS BUILT CHANGES 8/7/09

ESP0.1

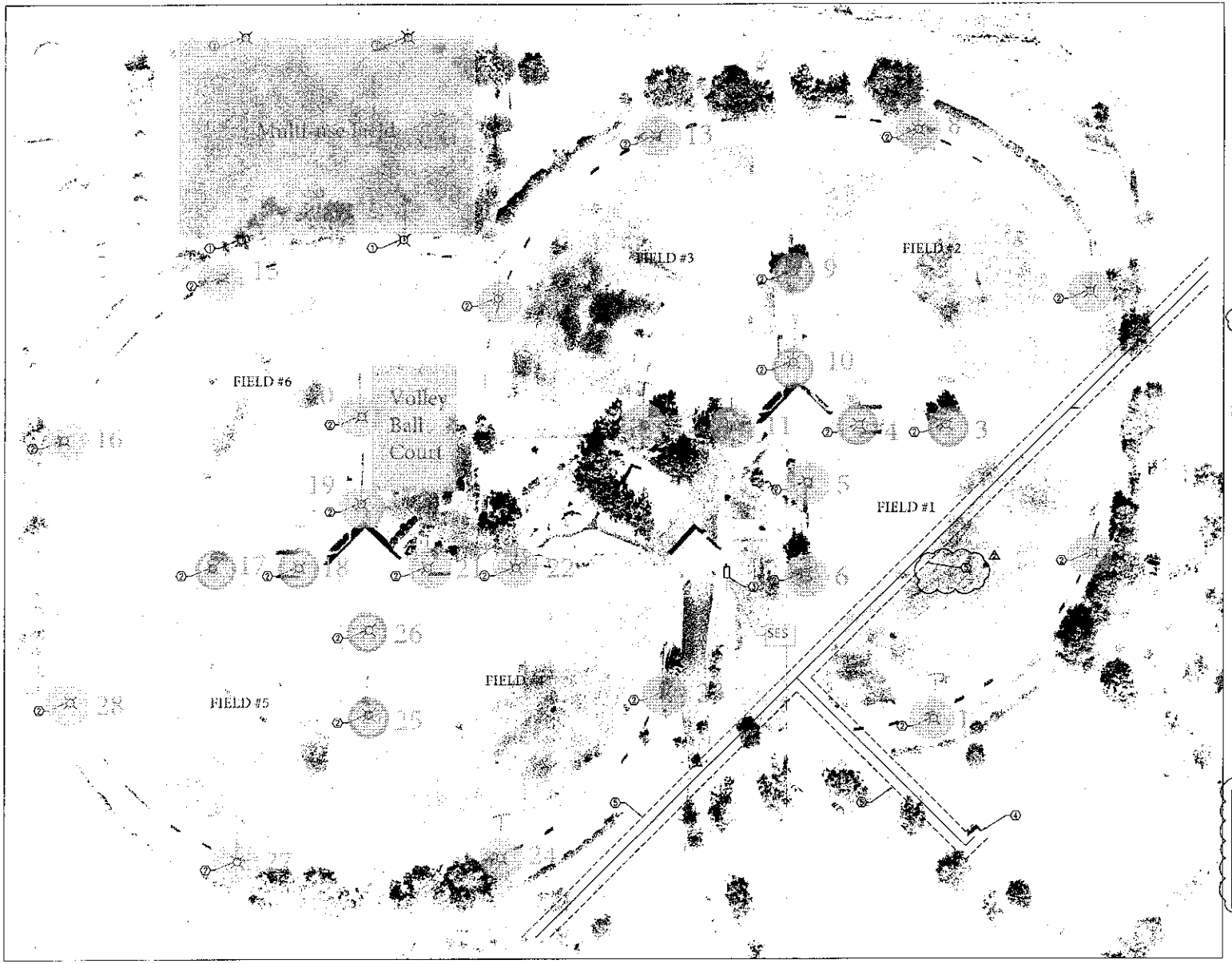


## GENERAL NOTES

A. PLAN IS PREPARED FROM AN AERIAL PHOTO. CONTRACTOR TO VISIT SITE PRIOR TO BID TO ASSESS EXISTING CONDITIONS.

## KEY NOTES

1. EXISTING SOCCER FIELD LIGHTING TO REMAIN. ALL ABOVE GRADE CONDUIT AND IN-GROUND PULLBOXES ASSOCIATED WITH THIS LIGHTING TO REMAIN BACK TO SOURCE. ELECTRICAL SOURCE FOR SOCCER FIELD LIGHTING TO REMAIN.
2. EXISTING SOFTBALL FIELD LIGHTING TO BE REMOVED BY CONTRACTOR. ALL LIGHTS, PULLBOXES, AND ABOVE GRADE CONDUITS TO BE REMOVED. CONTRACTOR TO CUT EXISTING POLES 12" BELOW GROUND SURFACE AND REMOVE, LEAVING WHAT REMAINS UNDER THE 12" BELOW GROUND SURFACE CUT.
3. EXISTING SES TO BE REMOVED BY CONTRACTOR. NEW UNISTRUT RACK TO BE MOUNTED ON EXISTING PAD WITH JUNCTION BOX AND (3)CO TERMINAL BLOCKS TO RECONNECT TEP TRANSFORMER TO NEW SES. REFER TO SINGLE LINE DIAGRAM FOR ADDITIONAL REQUIREMENTS.
4. EXISTING STORAGE SHED. △1
5. A.T. EASEMENT NO LONGER VALID OLD CABLE ABANDONED.

28 Total Poles

8 Double Facing Lights

SPORTS FIELD LIGHTING PROJECT
SOCCER FIELD LIGHTING
BRANDI FENTON MEMORIAL PARK

EXISTING SPORTS PARK OVERALL SITE

RAALCALA & Associates, Inc.
consulting electrical engineering
2560 N. Coyote Dr., Suite 103
Tucson, Az. 85745
(520) 623-7773

**RECORD DRAWINGS:**

DRAWINGS ISSUED BY R.A. ALCALA & ASSOCIATES, INC. (RAAI). UPON THE COMPLETION OF ELECTRICAL CONSTRUCTION, THESE DRAWINGS ARE BASED UPON THE MARKED UP DRAWINGS AND OTHER DATA FURNISHED TO RAAI BY THE ELECTRICAL CONTRACTOR ON AUG. 4, 2009, SHOWING SIGNIFICANT CHANGES IN THE INSTALLATION MADE DURING CONSTRUCTION. RAAI MAKES NO WARRANTY OF THE ACCURACY OR COMPLETENESS OF THE DRAWINGS.

EXPIRES 3/31/2011

PROJ. NO. 08027
DATE 07/22/08
DESIGNED BY: RAA2
CHECKED BY: RAA
DRAWN BY: AR
REVISIONS:
△1 P.C. REVIEW COMMENTS OF 8/1/08
△2 AS BUILT CHANGES 8/7/09

BASE BID

800-782-5348

ESP1.0

EXISTING SPORTS PARK OVERALL SITE
1"=50'

NORTH

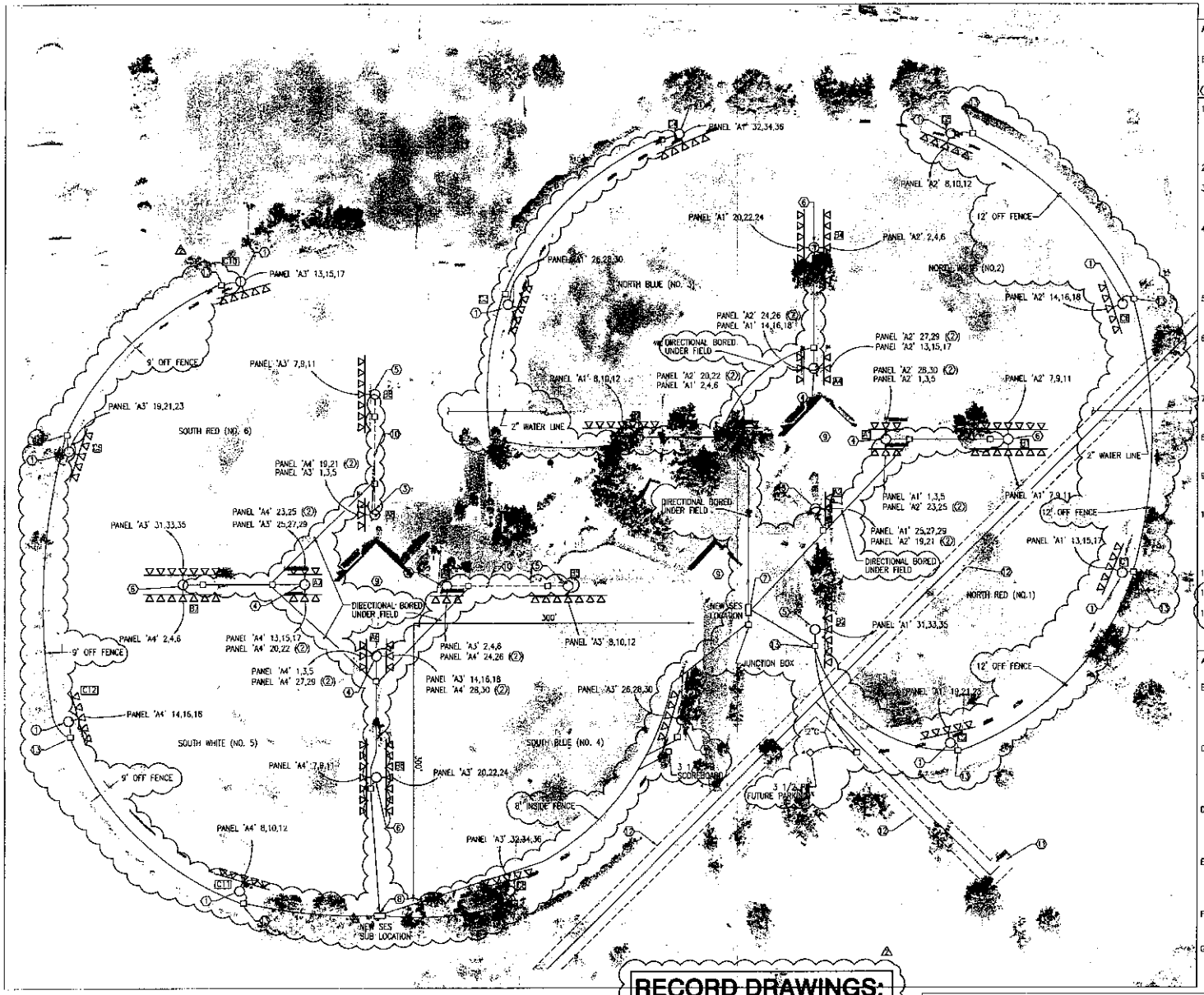


NEW SPORTS PARK LIGHTING PLAN
1"=50'

NORTH

## RECORD DRAWINGS:

DRAWINGS ISSUED BY R.A. ALCALA & ASSOCIATES, INC. (RAAI). UPON THE COMPLETION OF ELECTRICAL CONSTRUCTION, THESE DRAWINGS ARE BASED UPON THE MARKED UP DRAWINGS AND OTHER DATA FURNISHED TO RAAI BY THE ELECTRICAL CONTRACTOR ON AUG. 4, 2009, SHOWING SIGNIFICANT CHANGES IN THE INSTALLATION MADE DURING CONSTRUCTION. RAAI MAKES NO WARRANTY OF THE ACCURACY OR COMPLETENESS OF THE DRAWINGS.

## SPECIAL NOTE:

CONTRACTOR SHALL CONTACT MICHAEL BOLEY OF WILLIAM SELF ASSOCIATES (520-624-0101) A MINIMUM OF 3 WORKING DAYS PRIOR TO BEGINNING ANY AUGERING FOR POLE BASES. THE LOCATION OF THE POLE AUGERING IS TO BE CLEARLY MARKED. THE LOCATION WILL BE REVIEWED AND MONITORED BY MR. BOLEY. MR. BOLEY WILL ALSO MONITOR THE POLE AUGERING PROCESS. THE PURPOSE IS TO MINIMIZE SOIL DISTURBANCE OR DESTROYING BURIED CULTURAL RESOURCES.

## GENERAL NOTES

A. SITE PLAN IS DEVELOPED FROM AERIAL PHOTO OF PROJECT SITE. CAUTION WITH REGARDS TO SCALING PLAN.

B. CONTRACTOR IS TO VISIT SITE PRIOR TO BID TO VERIFY EXISTING CONDITIONS.

## KEY NOTES

1. 60' POLE WITH (5) LUMINAIRES (1500W) MH. CONTRACTOR TO INSTALL POLE AND LUMINAIRES PER LIGHTING MANUFACTURES SPECIFICATIONS AND REQUIREMENTS AS TO MAINTAIN 50 FC IN THE INFIELD AND 30 FC IN THE OUTFIELD MINIMUM.
2. CIRCUIT FOR INFIELD MAINTENANCE LIGHTS.
3. 60' POLE WITH (3) 1500W MH LUMINAIRES. CONTRACTOR TO INSTALL POLE AND LUMINAIRES PER LIGHTING MANUFACTURER'S SPECIFICATIONS AND REQUIREMENTS.
4. 60' POLE WITH (8) TOTAL 1500W MH LUMINAIRES. (3) 1500W MH LUMINAIRES FACING ONE INFIELD. (3) 1500W MH LUMINAIRES FACING OTHER INFIELD. MOUNT LUMINAIRES BACK TO BACK ON POLE. CONTRACTOR TO INSTALL POLE AND LUMINAIRES PER LIGHTING MANUFACTURES SPECIFICATIONS AND REQUIREMENTS.
5. 70' POLE WITH (7) 1500W MH LUMINAIRES. CONTRACTOR TO INSTALL POLE AND LUMINAIRES PER LIGHTING MANUFACTURES SPECIFICATIONS AND REQUIREMENTS.
6. 70' POLE WITH (14) TOTAL 1500W MH LUMINAIRES. MOUNT LUMINAIRES BACK TO BACK SO THAT (7) LUMINAIRES FACE ONE FIELD. THE OTHER (7) FACE OTHER FIELD. CONTRACTOR TO INSTALL POLES AND LUMINAIRES PER LIGHTING MANUFACTURES SPECIFICATIONS AND REQUIREMENTS.
7. NEW SES LOCATION. REFEED FROM EXISTING TRANSFORMER. REFER TO SINGLE LINE DIAGRAM FOR ADDITIONAL INFORMATION.
8. NEW SUB SES LOCATION. FEED FROM NEW SES LOCATION. REFER TO SINGLE LINE DIAGRAM FOR ADDITIONAL INFORMATION.
9. LOCATION OF EXISTING RAMADA PANEL. PANELS TO REMAIN AND BE REFED BY NEW SES SECTION. REFER TO SINGLE LINE DIAGRAM FOR ADDITIONAL INFORMATION.
10. EXISTING NETTING TO REMAIN. CONTRACTOR TO REMOVE ONLY EQUIPMENT ASSOCIATED WITH BALL FIELD LIGHTING ON POLES BB, AB, AS AND BS. CONTRACTOR CUT EXISTING POLES WHICH WILL REMAIN 1' ABOVE TOP NETTING SUPPORTS.
11. EXISTING STORAGE SHED.
12. ABANDONED A.J.T. CABLE.
13. NO. 3 1/2 P.B. FOR SCOREBOARD AND NO.5 PULL BOX FOR LIGHTING POLE.

## LANDSCAPE AND IRRIGATION REQUIREMENTS

A. THE FOLLOWING REQUIREMENTS APPLY TO THE CONDUIT SYSTEM SHOWN ON PLAN SHEETS ESP2.0 AND ESP2.1.

B. NO TRENCHING FOR ELECTRICAL CONDUIT SHALL ENCROACH WITHIN THE DRIPLINE OF AN EXISTING TREE. THE DRIPLINE IS THE CIRCLE THAT COULD BE DRAWN ON THE SOIL AROUND A TREE DIRECTLY UNDER THE TIPS OF ITS OUTERMOST BRANCHES. REDUCTION IN WIRE AND CONDUIT LENGTHS WILL NOT BE CONSIDERED JUSTIFICATION TO INTRUDE WITHIN DRIPLINES.

C. EVERY POSSIBLE EFFORT SHALL BE TAKEN TO AVOID DAMAGE TO EXISTING IRRIGATION PIPE AND EQUIPMENT. MAINLINE (ALWAYS CHARGED) PIPES WILL OFTEN HAVE CONTROL WIRES ALONGSIDE AND DETECTION TAPE INSTALLED. METAL DETECTION DEVICES CAN OFTEN LOCATE MAINLINE AND SHOULD BE USED PRIOR TO ANY TRENCHING.

D. REPAIRS TO ANY DAMAGED IRRIGATION PIPE OR EQUIPMENT MUST BE ACCOMPLISHED PROMPTLY TO AVOID LOSS OF PLANTS OR TURF GRASS. MAINTENANCE STAFF SHALL BE ALERTED IMMEDIATELY IN THE EVENT ANY PORTION OF IRRIGATION SERVICE WILL BE INTERRUPTED DUE TO DAMAGE FROM TRENCHING.

E. THE USE OF TELESCOPING, COMPRESSION REPAIR COUPLINGS IS NOT PERMITTED, SUBJECT TO THE OWNER'S APPROVAL. PIPE REPAIRS MAY BE MADE WITH HEAVY DUTY REPAIR COUPLINGS TO MATCH THE DIAMETER OF THE PIPE BEING REPAIRED: SMITH BLAIR 411 OR APPROVED EQUAL.

F. ALL SPLICES REQUIRED TO REPAIR IRRIGATION CONTROL WIRES SHALL BE LOCATED WITHIN ROUND VALVE BOXES AND CAREFULLY LOCATED ON RECORD DRAWINGS. REFER TO SPECIFICATIONS.

G. REFER TO SPECIFICATIONS FOR REQUIREMENTS TO FLUSH ANY DAMAGED PORTIONS OF IRRIGATION SYSTEMS AFTER REPAIRS AND TO DEMONSTRATE THAT FULL FUNCTION OF THE SYSTEM HAS BEEN RESTORED.

BASE BID

Call Toll Free Before You Dig 800-782-5348 Blue Stake, Inc. CALL BEFORE YOU DIG!

SPORTS FIELD LIGHTING PROJECT
SOCCER FIELD LIGHTING
BRANDI FENTON MEMORIAL PARK

NEW SPORTS PARK OVERALL SITE


RAALCALA & Associates, Inc.
consulting electrical engineering
2560 N. Cayote Dr., Suite 103
Tucson, Az. 85745
(520) 623-7773


14027 ROBERT A. ALCALA
EXPIRES 6/30/2011

PROJ. NO: 08027
DATE: 07/22/08
DESIGNED BY: RAA2
CHECKED BY: RAA
DRAWN BY: AR
REVISIONS:
1 P.C. REVIEW COMMENTS OF 8/1/08
2 AS BUILT CHANGES 8/7/09

ESP2.0

| POLE | SIZE WIRE | LUMINAIRES |
|---|---|---|
| *A1 | #10 AWG | 6 |
| A2 | #10 AWG | 3 |
| A3 | #10 AWG | 3 |
| *A4 | #10 AWG | 6 |
| A5 | #10 AWG | 3 |
| *A6 | #10 AWG | 6 |
| *A7 | #10 AWG | 6 |
| A8 | #10 AWG | 3 |
| *B1 | #6 AWG | 14 |
| B2 | #10 AWG | 3 |
| B3 | #8 AWG | 7 |
| *B4 | #6 AWG | 14 |

| POLE | SIZE WIRE | LUMINAIRES |
|---|---|---|
| B5 | #6 AWG | 5 |
| B6 | #10 AWG | 3 |
| B7 | #10 AWG | 5 |
| B8 | #10 AWG | 5 |
| B9 | #10 AWG | 5 |
| C1 | #6 AWG | 5 |
| C2 | #6 AWG | 5 |
| C3 | #4 AWG | 5 |
| C4 | #4 AWG | 5 |
| C5 | #4 AWG | 5 |
| C6 | #4 AWG | 5 |
| C7 | #8 AWG | 5 |
| C8 | #10 AWG | 5 |
| C9 | #8 AWG | 5 |
| C10 | #8 AWG | 5 |
| C11 | #4 AWG | 5 |
| C12 | #4 AWG | 5 |

* INDICATES POLE WITH LUMINAIRES FACING 2 FIELDS. CONTRACTOR TO RUN (2) 1½" CONDUITS FOR THESE POLES.

IMPORTANT NOTE

ALL 'A' POLE (A1-A8) TO HAVE (2) EXTRA 1500W MH SPORTS LIGHTING TYPE LUMINAIRE MOUNTED 31' BELOW SPORTS LIGHTING. THESE LUMINAIRES TO BE CONTROLLED ON SEPARATE ZONE FROM SPORTS LIGHTING. SHARE CONDUIT/WIRES IN SAME CONDUIT. REFER TO DETAIL ON SINGLE LINE SHEET FOR DETAILS.

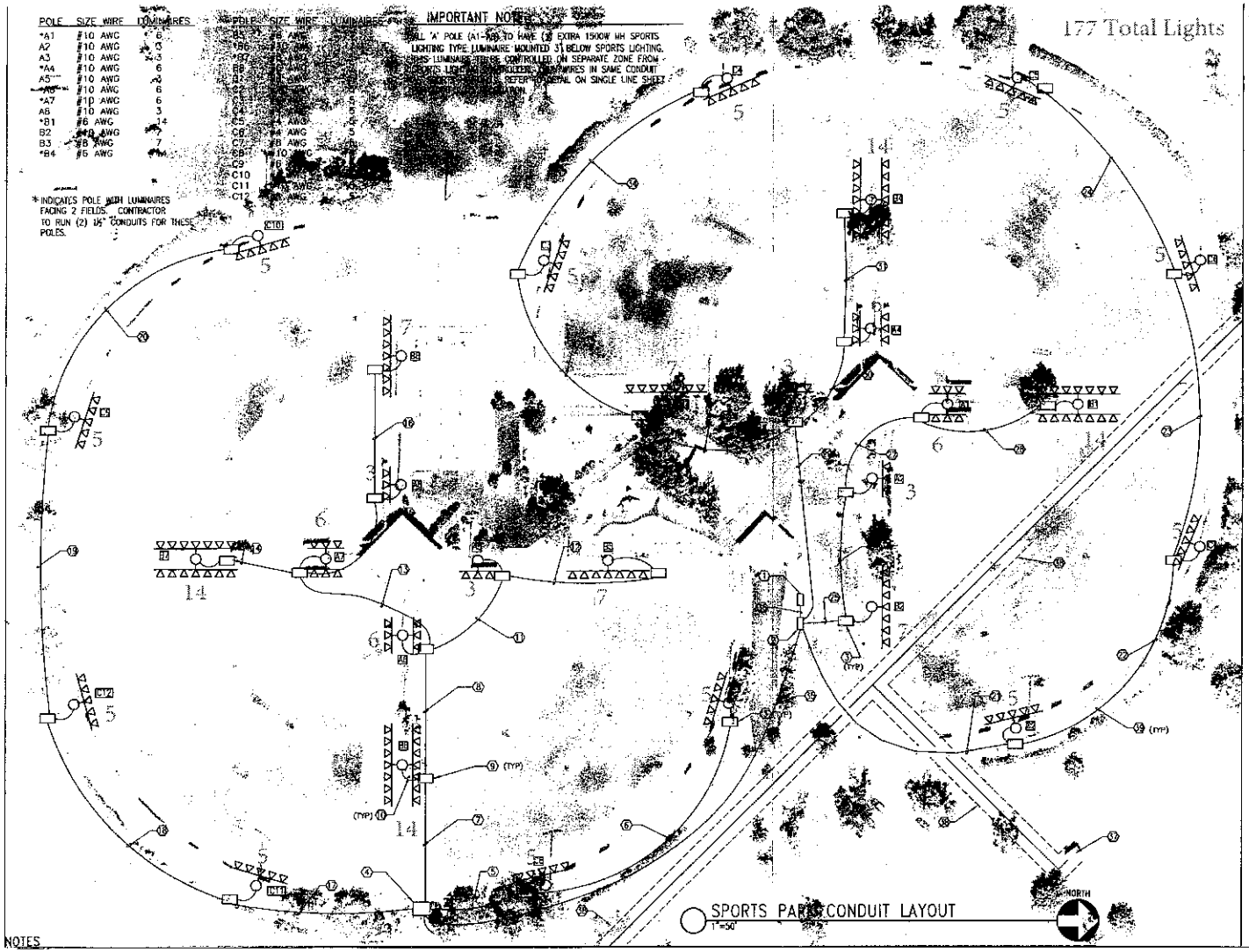


SPORTS PARK CONDUIT LAYOUT
1"=50'

## GENERAL NOTES

A. CONDUIT ROUTING ON THIS PLAN SHOWN FOR SYMBOLISM ONLY. ACTUAL RUNS TO BE RUN OUTSIDE FENCES AND DIRECTIONAL BORED UNDER BALL FIELDS ADJACENT TO BACKSTOP.

B. CONTRACTOR TO CHALK ALL CONDUIT ROUTING TO BE APPROVED BY NRPR PRIOR TO ANY TRENCHING OR DIRECTIONAL BORING.

C. NO. 7 PULLBOXES TO BE PLACED ADJACENT TO POLE IN GROUND LOCATED WHERE NO PHYSICAL DAMAGE MAY OCCUR WITH NORMAL DAILY ACTIVITIES AT SPORTS PARK.

D. REFER TO LIGHTING PLAN FOR POLE DETAILS AND LUMINAIRE COUNT.

E. ⊠ POLE IDENTIFICATION.

F. ALL WIRE TO BE COPPER.

G. CONTRACTOR TO AIM LIGHTS PER MANUFACTURER'S REQUIREMENTS TO OBTAIN 50/30 AVERAGE FOOTCANDLES LIGHTING FOR INFIELD/OUTFIELD RESPECTIVELY.

H. ALL 'A' POLES 60' TALL, ALL 'B' POLES 70' TALL, ALL 'C' POLES 60' TALL OR AS REQUIRED PROPERLY LIGHT FIELD AND COMPLY WITH PIMA COUNTY LIGHTING ORDINANCE AIMING LIMITATIONS.

## ○ KEY NOTES (CONTINUED)

25. (6) 1 1/2" CONDUITS TOTAL. (3) 1 1/2" CONDUITS EACH WITH (5) #10'S +(1) #10 GND FOR POLES A1 + A2. (2) 1 1/2" CONDUITS EACH WITH (3) #6'S + (1) #10 GND FOR POLE B1. (1) 1 1/2" CONDUIT WITH (3) #10'S + (1) #10 GND FOR POLE B2.

26. (5) 1 1/2" CONDUITS TOTAL. (3) 1 1/2" CONDUITS EACH WITH (5) #10'S + (1) #10 GND FOR POLES A1 + A2. (2) 1 1/2" CONDUIT EACH WITH (3) #6'S + (1) #10 GND FOR POLE B1.

27. (4) 1 1/2" CONDUITS TOTAL. (2) 1 1/2" CONDUITS EACH WITH (5) #10'S + (1) #10 GND FOR POLE A1. (2) 1 1/2" CONDUITS EACH WITH (3) #6'S + (1) #10 GND FOR POLE B1.

28. (2) 1 1/2" CONDUITS TOTAL EACH WITH (3) #6'S + (1) #10 GND FOR POLE B1.

29. (8) 1 1/2" CONDUITS TOTAL. (3) 1 1/2" CONDUITS EACH WITH (5) #10'S + (1) #10 GND FOR POLES A3 + A4. (1) 1 1/2" CONDUIT WITH (3) #6'S (1) # 10 GND FOR POLE B3. (2) 1 1/2" CONDUITS EACH WITH (3) #6'S + (1) #10 GND FOR POLE B4. (1) 1 1/2" CONDUIT WITH (3) #6'S + (1) #10 GND FOR POLE C3. (1) 1 1/2" CONDUIT WITH (3) #4'S + (1) #10 GND FOR POLE C4.

30. (4) 1 1/2" CONDUIT TOTAL. (2) 1 1/2" CONDUITS EACH WITH (5) #10'S + (1) #10 GND FOR POLE A4. (2) 1 1/2" CONDUITS EACH WITH (3) #6'S + (1) #10 GND FOR POLE B4.

31. (2) 1 1/2" CONDUITS EACH WITH (3) #6'S + (1) #10 GND FOR POLE B4.

32. (3) 1 1/2" CONDUITS TOTAL. (1) 1 1/2" CONDUIT WITH (3) #8'S + (1) #10 GND FOR POLE B3. (1) 1 1/2" CONDUIT WITH (3) #6'S + (1) #10 GND FOR POLE C3. (1) 1 1/2" CONDUIT WITH (3) #4'S + (1) #10 GND FOR POLE C4. (1) 1"C SCOREBOARD. △

33. (2) 1 1/2" CONDUITS TOTAL. (1) 1 1/2" CONDUIT WITH (3) #6'S + (1) #10 GND FOR POLE C3. (1) 1 1/2" CONDUIT WITH (3) #4'S + (1) #10 GND FOR POLE C4. (1) 1"C SCOREBOARD. △

34. (1) 1 1/2" CONDUIT WITH (3) #4'S + (1) #10 GND FOR POLE C4. (1) 1"C SCOREBOARD. △

35. (2) 3" CONDUITS EACH WITH (4)4/0 COPPER WIRE + (1) #3 GND. REFER TO SINGLE LINE DIAGRAM SHEET FOR ADDITIONAL INFORMATION AND REQUIREMENTS.

36. REFER TO SINGLE LINE DIAGRAM FOR CONDUIT AND WIRE REQUIREMENTS BETWEEN NEW SES AND JUNCTION BOXES.

37. EXISTING STORAGE SHED.

38. UNIDENTIFIED.

39. CONTRACTOR TO COORDINATE ELECTRICAL CONDUIT TRENCHING WITH THE ARCHAEOLOGICAL CONSULTANT WITHIN TIME FRAME OF CONSTRUCTION SCHEDULE. TRENCH ALL WEST SIDE CONDUIT FIRST.

## ○ KEY NOTES

1. NEW UNISTRUT RACK MOUNTED ON EXISTING PAD WITH (2) NEW NEMA 3R JUNCTION BOXES TO RE-FEED NEW SES SECTION. SIZE BOXES PER N.E.C. 2005 REQUIREMENTS. REFER TO SINGLE LINE DIAGRAM FOR ADDITIONAL INFORMATION AND REQUIREMENTS.

2. NEW SES INSTALLED ON NEW PAD. NEW CONDUIT AND WIRES FROM EXISTING WIRES IN JUNCTION BOXES OF NOTE (1) REFER TO SINGLE LINE DIAGRAM FOR ADDITIONAL INFORMATION AND REQUIREMENTS.

3. #7 PULLBOX ADJACENT TO POLE, TYPICAL ALL POLE LOCATIONS.

4. NEW SUB SES INSTALLED ON NEW PAD. REFER TO SINGLE LINE DIAGRAM FOR ADDITIONAL INFORMATION AND REQUIREMENTS.

5. (2) 1½" CONDUITS TOTAL. (1) 1½" CONDUIT WITH (3) #8'S + (1) #10 GND FOR POLE C7. (1) 1 ½" CONDUIT WITH (3) #10'S + (1) #10 GND FOR POLE C8.

6. (1) 1½" CONDUIT WITH (3) #8'S + (1) #10 GND FOR POLE C7.

7. (12) 1½" CONDUITS TOTAL. (6) 1½" CONDUITS WITH (5) #10'S + (1) #10 GND FOR POLES A5, A6, A7 + A8. (2) 1½" EACH WITH (3) #10'S + (1) #10 GND FOR POLE B6. (4) 1½" CONDUITS, EACH WITH (3) #6'S + (1) #10 GND FOR POLES B5, B7, + B8.

8. (10) 1½" CONDUITS TOTAL. (6) 1½" CONDUITS EACH WITH (5) #10'S +(1) #10 GND FOR POLES, A6, A7, A8, A5. (4) 1½" CONDUITS EACH WITH (3) #6'S + (1) #10 GND FOR POLES B7, B6, B5.

9. #5 PULLBOX TYPICAL FOR ALL LOCATIONS.

10. REFER TO POLE + SIZE WIRING CHART THIS SHEET FOR INFORMATION AND REQUIREMENTS.

11. (2) 1 1/2" CONDUITS TOTAL. (1) 1 1/2" CONDUIT WITH (5) #10'S +(1) #10 GND, FOR POLE A5. (1) 1 1/2" CONDUIT WITH (3) # 6'S + (1) # 1 GND FOR POLE B5.

12. (1) 1 1/2" CONDUIT WITH (3) # 6'S + (1) #10 GND FOR POLE B5.

13. (6) 1 1/2" CONDUITS TOTAL. (3) 1 1/2" CONDUITS, EACH WITH (5) #10'S + (1) #10 GND FOR POLES A7, + A8. (3) 1½" CONDUITS EACH WITH (3) #6'S + (1) # 10 GND FOR POLES B7 + B8.

14. (2) 1 1/2" CONDUITS EACH WITH (3) #6'S + (1) #10 GND FOR POLE B7.

15. (2) 1 1/2" CONDUITS TOTAL. (1) 1 1/2" CONDUIT WITH (5) #10'S + (1) #10 GND FOR POLE A6. (1) 1 1/2" CONDUIT WITH (3) #6'S + (1) # 10 GND FOR POLE B6.

SEE ESP2.0 FOR CONDUIT ROUTING △

16. (1) 1 1/2" CONDUIT WITH (3) #6'S + (1) # 10 GND FOR POLE B6.

17. (4) 1 1/2" CONDUITS TOTAL. (1) 1 1/2" CONDUIT WITH (3) #10'S + (1) #10 GND FOR POLE C11. (1) 1 1/2" CONDUIT WITH (3) #6'S + (1) #10 GND FOR POLE C12. (1) 1 1/2" CONDUIT WITH (3) #6'S + (1) #10 GND FOR POLE C9. (1) 1 1/2" CONDUIT WITH (3) #4'S + (1) #10 GND FOR POLE C10.

18. (3) 1 1/2" CONDUITS TOTAL. (1) 1 1/2" CONDUIT WITH (3) #8'S + (1) #10 GND FOR POLE C12. (1) 1 1/2" CONDUIT WITH (3) #6'S + (1) #10 GND FOR POLE C9. (1) 1 1/2" CONDUIT WITH (3) #4'S + (1) #10 GND FOR POLE C10. △ (1) 1"C FOR SCOREBOARD.

19. (2) 1 1/2" CONDUITS TOTAL. (1) 1 1/2" CONDUIT WITH (3) #6'S + (1) #10 GND FOR POLE C9. (1) 1 1/2" CONDUIT WITH (3) #4'S + (1) #10 GND FOR POLE C10. △ (1) 1"C FOR SCOREBOARD.

20. (1) 1 1/2" CONDUIT WITH (3) #4'S + (1) #10 GND FOR POLE C10. (1) 1"C FOR SCOREBOARD. △

21. (4) 1 1/2" CONDUITS TOTAL. (1) 1 1/2" CONDUIT WITH (3) #10'S + (1) #10 GND FOR POLE C2. (1) 1 1/2" CONDUIT WITH (3) #6'S + (1) #10 GND FOR POLE C1. (2) 1 1/2" CONDUITS EACH WITH (3) #4'S + (1) #10 GND FOR POLES C5, C6. △ (1) 1 1/4"C FOR SCOREBOARD.

22. (3) 1 1/2" CONDUITS TOTAL. (1) 1 1/2" CONDUIT WITH (3) #6'S + (1) #10 GND FOR POLE C1. (2) 1 1/2" CONDUITS EACH WITH (3) #4'S + (1) #10 GND FOR POLES C5 + C6.

23. (2) 1 1/2" CONDUITS EACH WITH (3) #4'S + (1) #10 GND FOR POLES C5 + C6. (1) 1"C FOR SCOREBOARD. △

24. (1) 1 1/2" CONDUIT WITH (3) #4'S + (1) #10 GND FOR POLE C5. (1) 1"C FOR SCOREBOARD 2#8, #10G. △

**RECORD DRAWINGS:**

DRAWINGS ISSUED BY R.A. ALCALA & ASSOCIATES, INC. (RAAI). UPON THE COMPLETION OF ELECTRICAL CONSTRUCTION, THESE DRAWINGS ARE BASED UPON THE MARKED UP DRAWINGS AND OTHER DATA FURNISHED TO RAAI BY THE ELECTRICAL CONTRACTOR ON AUG. 4, 2009, SHOWING SIGNIFICANT CHANGES IN THE INSTALLATION MADE DURING CONSTRUCTION. RAAI MAKES NO WARRANTY OF THE ACCURACY OR COMPLETENESS OF THE DRAWINGS.

BASE BID

Call Before You Dig 800-782-5348

SPORTS FIELD LIGHTING PROJECT
SOCCER FIELD LIGHTING
BRANDI FENTON MEMORIAL PARK

SPORTS PARK CONDUIT LAYOUT


RAALCALA & Associates, Inc.
consulting electrical engineering
2560 N. Coyote Dr., Suite 103
Tucson, Az. 85745
(520) 623-7773

PROJ. NO: 08027
DATE: 07/22/08
DESIGNED BY: RAA2
CHECKED BY: RAA
DRAWN BY: AR
REVISIONS:
△ P.C. REVIEW COMMENTS OF 8/1/08
△ AS BUILT CHANGES 8/7/09

ESP2.1

# GENERAL STRUCTURAL NOTES

*APPLY UNLESS NOTED OTHERWISE*

1. ALL WORK SHALL CONFORM TO THE 2006 INTERNATIONAL BUILDING CODE.

2. NOTES AND DETAILS ON DRAWINGS SHALL TAKE PRECEDENCE OVER GENERAL STRUCTURAL NOTES AND TYPICAL DETAILS. WHERE NO SPECIFIC DETAILS ARE SHOWN, CONSTRUCTION SHALL CONFORM TO SIMILAR WORK ON THE PROJECT.

3. THE CONTRACTOR SHALL TAKE ALL MEASURES NECESSARY TO PROTECT THE STRUCTURE DURING CONSTRUCTION INCLUDING, BUT NOT LIMITED TO, BRACING, SHORING, ETC. THE CONTRACTOR SHALL BE RESPONSIBLE FOR THE DESIGN AND IMPLEMENTATION OF ALL SCAFFOLDING, BRACING AND SHORING. OBSERVATION VISITS TO THE SITE BY THE STRUCTURAL ENGINEER SHALL NOT INCLUDE INSPECTION OF THE ABOVE ITEMS. THE STRUCTURAL ENGINEER WILL NOT BE RESPONSIBLE FOR THE CONTRACTOR'S MEANS, METHODS, TECHNIQUES, SEQUENCES OR PROCEDURES OF CONSTRUCTION, NOR WILL THE STRUCTURAL ENGINEER BE RESPONSIBLE FOR CONSTRUCTION SITE SAFETY, OR THE SAFETY PRECAUTIONS AND THE PROGRAMS INCIDENT THERETO.

4. THE CONTRACT STRUCTURAL DRAWINGS REPRESENT THE FINISHED STRUCTURE. THEY DO NOT INDICATE THE METHOD OF CONSTRUCTION.

5. NO SOIL REPORT PROVIDED. FOUNDATION DESIGN IS BASED ON MINIMUM IBC SOIL PASSIVE VALUE = 200 PCF PER TABLE 1804.2.

6. LAP SPLICES FOR REINFORCING IN CONCRETE SHALL BE 30 BAR DIAMETERS MINIMUM.

7. DESIGN LOADS:

   WIND: BASIC WIND SPEED = 90 MPH, EXPOSURE "C", I = 1.0
   SEISMIC: DESIGN CAT = C

8. MATERIALS OF CONSTRUCTION:

   CONCRETE -------- ASTM C94, F' c = 3000 PSI AT 28 DAYS

   REINFORCING ------ ASTM A615 GRADE 40 FOR #5 AND SMALLER
   ASTM A615 GRADE 60 FOR #6 AND LARGER

9. SPECIAL INSPECTION - CONCRETE PER IBC SECTION 1704.4

10. SHOP DRAWINGS SHALL BE SUBMITTED FOR ALL STRUCTURAL ITEMS IN ADDITION TO ITEMS REQUIRED BY ARCHITECTURAL SPECIFICATIONS.

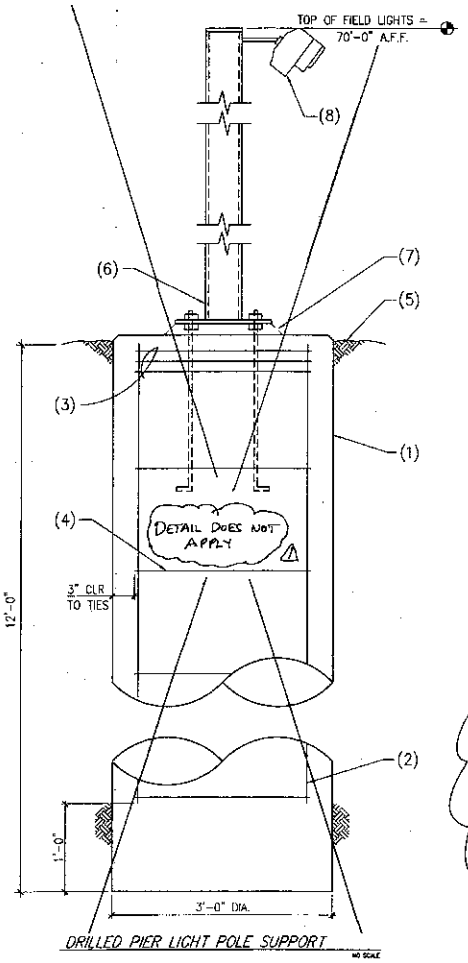


DRILLED PIER LIGHT POLE SUPPORT

NO SCALE

NOTES:

1. CONCRETE SHAFT (f'c = 3000 PSI) - SPECIAL INSPECTION REQUIRED.
2. (7) #8 VERTICAL REBAR.
3. 3 TIES IN TOP 5" OF SHAFT.
4. #3 TIES AT 16" O.C.
5. FINISHED GRADE.
6. POLE, BASEPLATE, AND ANCHOR BOLTS BY OTHERS. POLE AND CONNECTIONS SHALL BE RATED FOR 90 MPH WIND LOADING. POLE SHALL BE 12" ROUND MAX.
7. 1 1/2" MIN. 5000 PSI NON-SHRINK GROUT.
8. MAXIMUM TOTAL NUMBER OF FIXTURES IS (7) WITH EFFECTIVE PROJECTED AREA OF 2.2 FT^2 PER FIXTURE, MAX.

AT CONTRACTORS OPTION PRECAST CONCRETE POLES (MUSCO OR EQUIVALENT) DIRECTLY EMBEDDED MAY BE USED I.L.O. CONCRETE CAISSONS. THE CONTRACTOR SHALL SUBMIT CALCULATIONS AND SHOP DRAWINGS SEALED BY A CIVIL OR STRUCTURAL ENGINEER REGISTERED IN THE STATE OF ARIZONA FOR REVIEW PRIOR TO FABRICATION.


SCHNEIDER & ASSOCIATES STRUCTURAL ENGINEERS
1700 E. Ft. Lowell Rd. #108
Tucson, Arizona 85719
PHONE 520.512.8383
FAX 520.512.8369
WEB www.sesstructural.com
PROJECT NO. 108343



UNLESS THIS DRAWING IS SIGNED AND SEALED BY A LICENSED STRUCTURAL ENGINEER, IT IS A PRELIMINARY DESIGN AND SHALL NOT BE USED FOR CONSTRUCTION.


SPORTS PARK LIGHTING
LIGHT SUPPORT
TUCSON, ARIZONA

GENERAL STRUCTURAL NOTES/DETAILS


RAALCALA & Associates, Inc.
consulting electrical engineering
2560 N. Coyote Dr., Suite 103
Tucson, Az. 85745
(520) 623-7773


PROJ. NO. 04009-02
DATE: JULY 2008
DESIGNED BY: SES
CHECKED BY: DNC
DRAWN BY: JDE
REVISIONS:
1 AS-BUILT

S-1

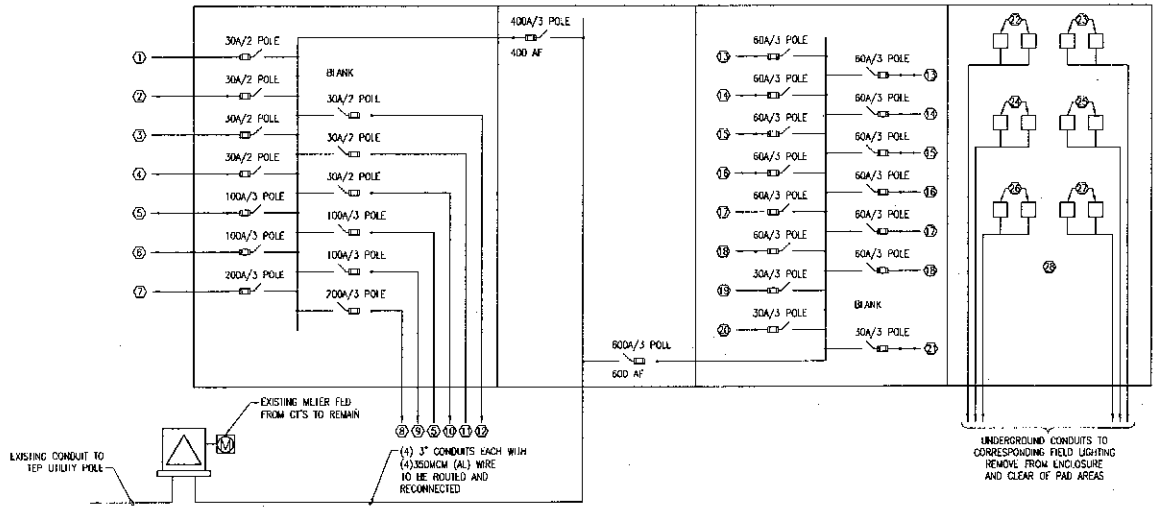


SINGLE LINE DIAGRAM – EXISTING (SPORTS PARK)
NOT TO SCALE

## GENERAL NOTES

A. CONTRACTOR TO VISIT SITE PRIOR TO BIDDING TO ASSESS EXISTING CONDITIONS.

B. CONTRACTOR TO VERIFY EXISTING CIRCUITRY PRIOR TO DISCONNECTING EXISTING CIRCUITS DURING THE CUTOVER PROCESS.

C. CONTRACTOR TO MARK AS-BUILT PLANS AND FIELD WIRES WITH IDENTIFICATION OF CIRCUITS.

## KEY NOTES

1. FEED FOR MESSAGE CENTER TO BE REROUTED AND RECONNECTED.
2. FEED FOR NORTH RED SCOREBOARD TO BE REROUTED AND RECONNECTED.
3. FEED FOR NORTH BLUE SCOREBOARD TO BE REROUTED AND RECONNECTED.
4. FEED FOR SOUTH WHITE SCOREBOARD TO BE REROUTED AND RECONNECTED.
5. CONTRACTOR TO FIELD VERIFY THAT EXISTING LOAD IS PRESENT. (NO EXISTING AS-BUILT PLANS). REROUTE AND RECONNECT.
6. FEED FOR NORTH CONCESSION AREA TO BE REROUTED AND RECONNECTED.
7. FEED FOR PAY AREA. CONTRACTOR TO FIELD VERIFY. (NO EXISTING AS-BUILT PLANS). REROUTE AND RECONNECT.
8. FEED FOR SOCCER FIELD AND TRANSFORMER TO BE DISCONNECTED AS A PART OF THIS PROJECT.
9. FEED FOR SOUTH CONCESSION TO BE REROUTED AND RECONNECTED.
10. FEED FOR SOUTH RED SCOREBOARD TO BE REROUTED AND RECONNECTED.
11. FEED FOR SOUTH BLUE SCOREBOARD TO BE REROUTED AND RECONNECTED.
12. FEED FOR NORTH WHITE SCOREBOARD TO BE REROUTED AND RECONNECTED.
13. FEED FOR NORTH BLUE CONTACTOR. FIELD LIGHTS.
14. FEED FOR NORTH WHITE CONTACTOR. FIELD LIGHTS.
15. FEED FOR NORTH RED CONTACTOR. FIELD LIGHTS.
16. FEED FOR SOUTH BLUE CONTACTOR. FIELD LIGHTS.
17. FEED FOR SOUTH WHITE CONTACTOR. FIELD LIGHTS.
18. FEED FOR SOUTH RED CONTACTOR. FIELD LIGHTS.
19. FEED FOR PARKING LIGHTS CONTACTOR TO BE REROUTED AND RECONNECTED.
20. FEED FOR VOLLEY BALL LIGHTS TO BE REROUTED AND RECONNECTED.
21. FEED FOR LIGHTING CONTROLLER.
22. NORTH RED LIGHTING CONTACTORS. DISCONNECT WIRES AND REMOVE FROM EXISTING ENCLOSURE AND AWAY FROM PAD AREA.
23. NORTH WHITE LIGHTING CONTACTORS. DISCONNECT WIRES AND REMOVE FROM EXISTING ENCLOSURE AND AWAY FROM PAD AREA.
24. NORTH BLUE LIGHTING CONTACTORS. DISCONNECT WIRES AND REMOVE FROM EXISTING ENCLOSURE AND AWAY FROM PAD AREA.
25. SOUTH RED LIGHTING CONTACTORS. DISCONNECT WIRES AND REMOVE FROM EXISTING ENCLOSURE AND AWAY FROM PAD AREA.
26. SOUTH WHITE LIGHTING CONTACTORS. DISCONNECT WIRES AND REMOVE FROM EXISTING ENCLOSURE AND AWAY FROM PAD AREA.
27. SOUTH BLUE LIGHTING CONTACTORS. DISCONNECT WIRES AND REMOVE FROM EXISTING ENCLOSURE AND AWAY FROM PAD AREA.
28. EXISTING FIELD LIGHTING RELAY, TIMERS, TIME CLOCKS IN THIS AREA. CONTRACTOR TO FIELD VERIFY EXACT LOCATION WITHIN CABINET.

**RECORD DRAWINGS:**
DRAWINGS ISSUED BY R.A. ALCALA & ASSOCIATES, INC. (RAAI). UPON THE COMPLETION OF ELECTRICAL CONSTRUCTION, THESE DRAWINGS ARE BASED UPON THE MARKED UP DRAWINGS AND OTHER DATA FURNISHED TO RAAI BY THE ELECTRICAL CONTRACTOR ON AUG. 4, 2009, SHOWING SIGNIFICANT CHANGES IN THE INSTALLATION MADE DURING CONSTRUCTION. RAAI MAKES NO WARRANTY OF THE ACCURACY OR COMPLETENESS OF THE DRAWINGS.

BASE BID

800-782-5348

SPORTS FIELD LIGHTING PROJECT
SOCCER FIELD LIGHTING
BRANDI FENTON MEMORIAL PARK

SINGLE LINE DIAGRAM – EXISTING (SPORTS PARK)

RAALCALA & Associates, Inc.
consulting electrical engineering
2560 N. Coyote Dr., Suite 103
Tucson, Az. 85745
(520) 623-7773

EXPIRES 3/31/2011

PROJ. NO: 08027
DATE: 07/22/08
DESIGNED BY: RAA2
CHECKED BY: RAA
DRAWN BY: AR
REVISIONS:
1 AS BUILT CHANGES 8/7/09

ESP3.0

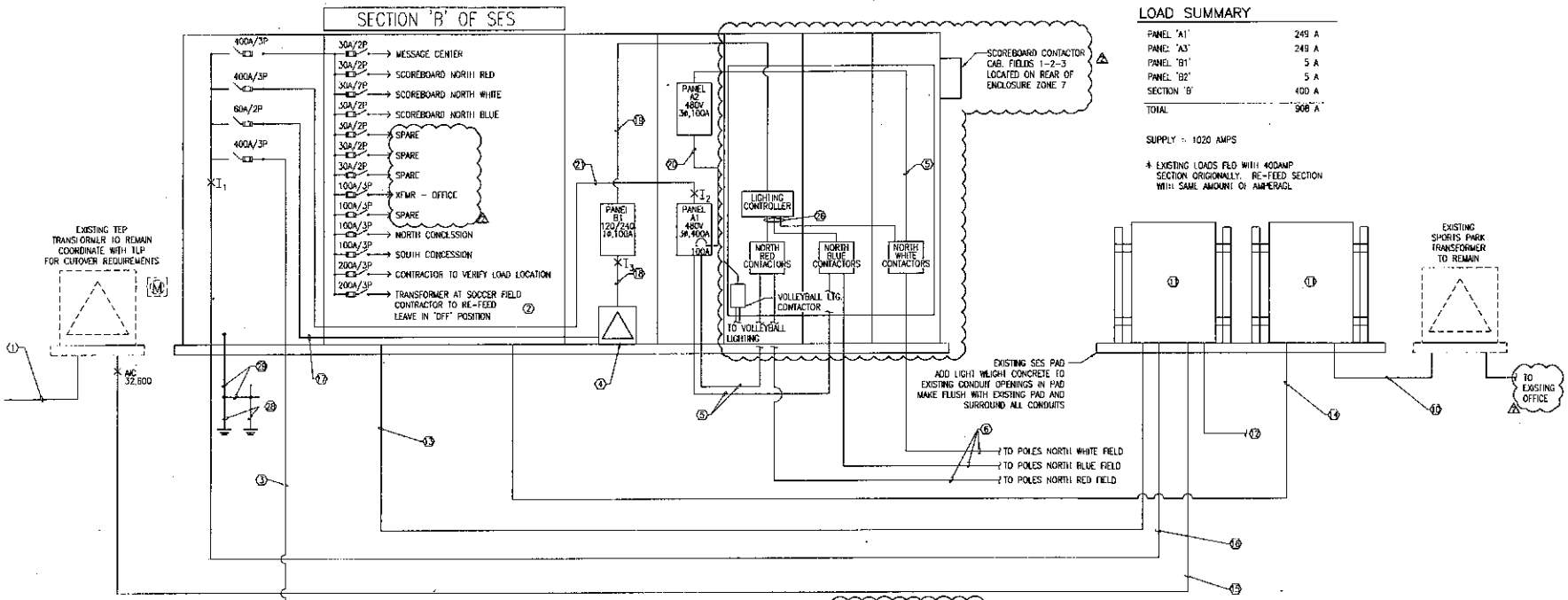


## LOAD SUMMARY

| | |
|---|---|
| PANEL 'A1' | 249 A |
| PANEL 'A3' | 249 A |
| PANEL 'B1' | 5 A |
| PANEL 'B2' | 5 A |
| SECTION 'B' | 400 A |
| TOTAL | 908 A |

SUPPLY = 1020 AMPS

* EXISTING LOADS FED WITH 400AMP SECTION ORIGIONALLY. RE-FEED SECTION WITH SAME AMOUNT OF AMPERAGE.

## KEY NOTES

1. EXISTING TRANSFORMER FEED TO UTILITY POLE TO REMAIN.
2. CONTRACTOR TO VERIFY ALL CONDUIT SIZE AND WIRE PRIOR TO ANY ROUGH-IN.
3. (2) NEW 3" CONDUITS, EACH WITH (4)#4/0 COPPER + (1)#3 GND TO FEED SUB SWITCH GEAR LOCATED OUTSIDE OF FIELDS SOUTH BLUE AND WHITE. REFER TO SITE PLAN FOR LOCATION.
4. NEW 480V, 1ø, 15KVA TRANSFORMER STEP DOWN TO 120/240, 1ø FOR PANEL LOCATED IN SWITCHGEAR. LABEL PANEL AS 'B1'.
5. CONDUITS FROM PANEL 'A1' AND 'A2' TO NORTH FIELD LIGHTING CONTACTORS.
6. CONDUITS FROM CONTACTORS TO EACH POLE. VERIFY QUANTITY OF CONDUITS WITH LIGHTING PLAN.
7. NEW 480V, 1ø, 15KVA TRANSFORMER STEP DOWN TO 120/240, 1ø FOR PANLL LOCATED IN SWITCHGEAR. LABEL PANEL AS 'B2'.
8. CONDUITS FROM PANEL 'A3' AND 'A4' TO SOUTH FIELD LIGHTING CONTACTORS. VERIFY QUANTITY OF CONDUITS WITH LIGHTING PLAN.
9. CONDUITS FROM CONTACTORS TO EACH POLE. VERIFY QUANTITY OF CONDUITS WITH LIGHTING PLAN.
10. EXISTING CONDUIT AND WIRE FROM EXISTING TRANSFORMER TO REMAIN.

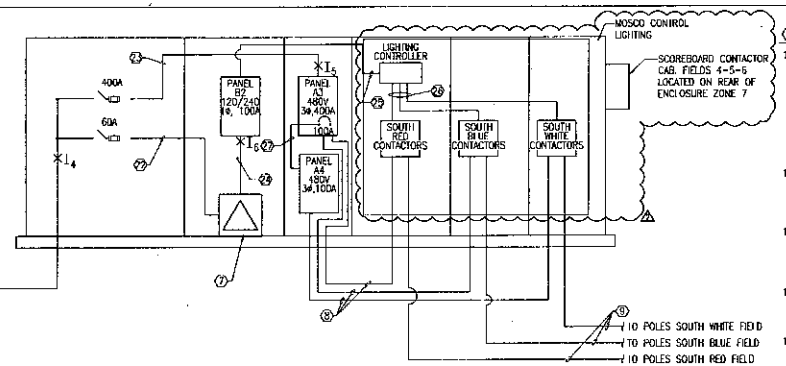


## (A) SINGLE LINE DIAGRAM - NEW

NOT TO SCALE

## KEY NOTES (CONTINUED)

11. NEW NEMA 3R JUNCTION BOX WITH ILSCO TERMINAL BLOCKS FOR PURPOSE OF TERMINATING WIRES AND TO EXTEND THE EXISTING SERVICE ENTRANCE, RAMADA, MESSAGE CENTER, CONCESSION AREAS, SCOREBOARDS AND ANY OTHER EXISTING LOADS OTHER THAN THE EXISTING POLES FOR FIELD LIGHTING TO THE NEW SES SECTION. CONTRACTOR TO FIELD VERIFY ALL EXISTING LOADS AND TO SUPPLY PROPER SIZE TERMINAL BLOCK. CONTRACTOR RESPONSIBLE FOR RE-GROUNDING NEW SES SECTION PER 2005 N.E.C.
12. EXISTING CONDUITS RUN FOR CONCESSION AREAS, RAMADAS, SCOREBOARDS, MESSAGE CENTER, SOCCER FIELDS AND OTHER EXISTING LOADS TO REMAIN. CONDUIT AND WIRE TO REMAIN.
13. NEW CONDUITS FOR CONCESSION AREAS, RAMADAS AND OTHER EXISTING LOADS BEING RE-FED FROM SES. CONTRACTOR TO VERIFY ALL LOADS AND RE-FEED USING PROPER SIZE CONDUIT AND WIRE PER LOAD.
14. CONTRACTOR TO RUN NEW 2½" CONDUIT WITH (4)#3/0 COPPER + (1)#6 GND TO RE-FEED EXISTING 480V, 3ø, 75KVA TRANSFORMER.
15. (4) 3" CONDUITS EACH WITH (4)350MCM AL + (1)2/0 GND. EXISTING FEED FROM T.E.P. TRANSFORMER TO EXISTING SES. CONDUIT TO BE EXTENDED INTO JUNCTION BOX AND WIRES CONNECTED TO ILSCO TERMINAL BLOCK (OR APPROVED EQUAL). CONTRACTOR TO APPLY NO-LOX OR APPROVED EQUAL TO BARE ALUMINUM WIRE WHEN INSTALLING INTO NEW LUG. LUGS TO BE SANDED INSIDE TO PREVENT CORROSION OR CONTAMINATION.
16. (4) NEW 3" CONDUITS, EACH WITH (4)350MCM AL + (1)2/0 GND CONNECTED TO ILSCO TERMINAL BLOCK ON LOAD SIDE OF SERVICE FEEDER WIRES TO FEED NEW SES.

## GENERAL NOTES

A. EXISTING LOADS TO BE RE-FED CAN BE SPLICED IN EITHER NEMA 3R JUNCTION BOX.
B. CONTRACTOR TO ENSURE WATERTIGHT SEAL TO EXISTING PAD AND NEW PAD FOR JUNCTION BOXES AND NEW SES.
C. CONTRACTOR TO RECONNECT EXISTING GROUND BONDING PER N.E.C. 2005 REQUIREMENTS.

## KEY NOTES (CONTINUED)

17. (3)#4 CU WIRES + (1)#8 GND TO FEED TRANSFORMER.
18. (3)#4 CU WIRES + (1)#8 GND TO FEED PANEL 'B1'.
19. (3)#10 + (1)#10 GND FOR LIGHTING CONTROLLER.
20. (3)#2 + (1)#8 GND TO FEED PANEL 'A2'. RUN FROM 100A/3POLE BREAKER IN PANEL 'A1'.
21. (3)#250MCM CU WIRES + (1)#4 GND TO FEED PANEL 'A1'.
22. (3)#4 CU WIRES + (1)#8 GND TO FEED TRANSFORMER.
23. (3)#250MCM CU WIRES + (1)#4 GND TO FEED PANEL 'A3'.
24. (3)#4 CU WIRES + (1)#8 GND TO FEED PANEL 'B2'.
25. (3)#10 + (1)#10 GND FOR LIGHTING CONTROLLER.
26. CONTROL WIRING FOR INTERCONNECT OF CONTACTORS WITH LIGHTING CONTROLLER.
27. (3)#2 + (1)#8 GND TO FEED PANEL 'A4'. RUN FROM 100A/3 POLE BREAKER IN PANEL 'A3'.
28. (2) ⅝" X 8' GROUND RODS INSTALLED A MINIUM OF 6 FEET APART.
29. 2/0 COPPER.

BASE BID

## SPORTSFIELD SEQUENCE OF OPERATION

1. POWER TO FIELD LIGHTS TO BE AVAILABLE AT ALL HOURS.
2. CONTROLLER TO PROVIDE ON-OFF OPERATION OF EACH FIELD ON A PER POLE BASIS.
3. CONTROLLER TO PROVIDE ON-OFF OPERATION OF INFIELD MAINTENANCE LIGHT ON A PER FIELD BASIS.
4. OPERATION OF CONTROLLER TO BE VIA TELEPHONE INTERCONNECT (WIRELESS) WITH 24/7 CENTRAL OPERATION.
5. PIMA COUNTY TO REGULATE "TIME ON AND TIME OFF" PER DAY.

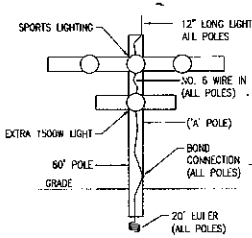


## (B) A.M. INFIELD LIGHTING DETAIL

NOT TO SCALE

## GENERAL NOTES - A.M. INFIELD LIGHTING DETAIL

A. MOUNT EXTRA 1500W MH LUMINAIRE 3 FEET BELOW SPORTS LIGHTING. AIM PER OWNERS PREFERENCES. THIS LUMINAIRE TO BE CONTROLLED ON SEPARATE ZONE FOR EARLY A.M. WORK ON FIELD. NOT TO BE TIED IN WITH OTHER SPORTS LIGHTING ZONES.

**RECORD DRAWINGS:**

DRAWINGS ISSUED BY R.A. ALCALA & ASSOCIATES, INC. (RAA). UPON THE COMPLETION OF ELECTRICAL CONSTRUCTION, THESE DRAWINGS ARE BASED UPON THE MARKED UP DRAWINGS AND OTHER DATA FURNISHED TO RAA BY THE ELECTRICAL CONTRACTOR ON AUG. 4, 2009, SHOWING SIGNIFICANT CHANGES IN THE INSTALLATION MADE DURING CONSTRUCTION. RAA MAKES NO WARRANTY OF THE ACCURACY OR COMPLETENESS OF THE DRAWINGS.

SPORTS FIELD LIGHTING PROJECT
SOCCER FIELD LIGHTING
BRANDI FENTON MEMORIAL PARK

SINGLE LINE DIAGRAM - NEW


RAALCALA & Associates, Inc.
consulting electrical engineering
2560 N. Corvee Dr., Suite 103
Tucson, Az. 85745
(520) 623-7773


ROBERT A. ALCALA
EXPIRES 3/31/2011

PROJ. NO: 08027
DATE: 07/22/08
DESIGNED BY: RAA2
CHECKED BY: RAA
DRAWN BY: AR
REVISIONS:
1 P.C. REVIEW COMMENTS OF 8/1/08
2 AS BUILT CHANGES 9/7/09

800-782-5348

ESP4.0

# PANELBOARD SCHEDULE

PANELBOARD: "A1" VOLTAGE: 480V 3 PH. 3 WIRE 42 KAIC
TYPE: NEW MOUNTING INSIDE MAIN SES 400 AMP MAIN □ LUGS ONLY ■ BREAKER

BRANCH CIRCUITS

| CIRCUIT DESCRIPT. | CKT NO. | C/B | WIRE SIZE | VA/PHASE A | VA/PHASE B | VA/PHASE C | WIRE SIZE | C/B | CKT NO. | CIRCUIT DESCRIPT. |
|---|---|---|---|---|---|---|---|---|---|---|
| - | 1 | 30A/3P | - | 1709 / 1709 | | | - | 30A/3P | 2 | - |
| NORTH RED POLE A1 | 3 | | - | | 1709 / 1709 | | - | | 4 | NORTH BLUE POLE A3 |
| - | 5 | | - | | | 1709 / 1709 | - | | 6 | - |
| - | 7 | 30A/3P | - | 3988 / 3988 | | | - | 30A/3P | 8 | - |
| NORTH RED POLE B1 | 9 | | - | | 3988 / 3988 | | - | | 10 | NORTH BLUE POLE B3 |
| - | 11 | | - | | | 3988 / 3988 | - | | 12 | - |
| - | 13 | 30A/3P | - | 2848 / 1709 | | | - | 30A/3P | 14 | - |
| NORTH RED POLE C1 | 15 | | - | | 2848 / 1709 | | - | | 16 | NORTH BLUE POLE A4 |
| - | 17 | | - | | | 2848 / 1709 | - | | 18 | - |
| - | 19 | 30A/3P | - | 2848 / 3988 | | | - | 30A/3P | 20 | - |
| NORTH RED POLE C2 | 21 | | - | | 2848 / 3988 | | - | | 22 | NORTH BLUE POLE B4 |
| - | 23 | | - | | | 2848 / 3988 | - | | 24 | - |
| - | 25 | 30A/3P | - | 1709 / 2848 | | | - | 30A/3P | 26 | - |
| NORTH RED POLE A2 | 27 | | - | | 1709 / 2848 | | - | | 28 | NORTH BLUE POLE C3 |
| - | 29 | | - | | | 1709 / 2848 | - | | 30 | - |
| - | 31 | 30A/3P | - | 3988 / 2848 | | | - | 30A/3P | 32 | - |
| NORTH RED POLE B2 | 33 | | | | 3988 / 2848 | | - | | 34 | NORTH BLUE POLE C4 |
| - | 35 | | - | | | 3988 / 2848 | - | | 36 | - |
| - | 37 | 20A/2P | - | 23500 | | | - | 100A/3P | 38 | - |
| - | 39 | | - | | 23500 | | - | | 40 | FEED FOR PANEL "A2" |
| - | 41 | - | | | | 21363 | - | | 42 | - |

| LOAD | A | B | C |
|---|---|---|---|
| LIGHTING | 34180 | 34180 | 34180 |
| RECEPTACLES | - | - | - |
| MOTORS | - | - | - |
| OTHER | 25638 | 25638 | 25638 |
| + 25% OF CONTINUOUS LOAD | 8545 | 8545 | 8545 |
| + 25% LARGEST MOTOR | - | - | - |
| TOTAL CONNECTED LOAD | 68363 | 68363 | 68363 |

TOTAL CODE LOAD = 205089 VA
MAX. CODE CURRENT = 247 AMPS

# PANELBOARD SCHEDULE

PANELBOARD: "A2" VOLTAGE: 480V 3 PH. 3 WIRE 42 KAIC
TYPE: NEW MOUNTING INSIDE MAIN SES 100 AMP MAIN ■ LUGS ONLY □ BREAKER

BRANCH CIRCUITS

| CIRCUIT DESCRIPT. | CKT NO. | C/B | WIRE SIZE | VA/PHASE A | VA/PHASE B | VA/PHASE C | WIRE SIZE | C/B | CKT NO. | CIRCUIT DESCRIPT. |
|---|---|---|---|---|---|---|---|---|---|---|
| - | 1 | 30A/3P | - | 1709 / 3988 | | | - | 30A/3P | 2 | - |
| NORTH WHITE POLE A1 | 3 | | - | | 1709 / 3988 | | - | | 4 | NORTH WHITE POLE B4 |
| - | 5 | | - | | | 1709 / 3988 | - | | 6 | - |
| - | 7 | 30A/3P | - | 3988 / 2848 | | | - | 30A/3P | 8 | - |
| NORTH WHITE POLE B1 | 9 | | - | | 3988 / 2848 | | - | | 10 | NORTH WHITE POLE C5 |
| - | 11 | | - | | | 3988 / 2848 | - | | 12 | - |
| - | 13 | 30A/3P | - | 1709 / 2848 | | | - | 30A/3P | 14 | - |
| NORTH WHITE POLE A4 | 15 | | - | | 1709 / 2848 | | - | | 16 | NORTH WHITE POLE C6 |
| - | 17 | | - | | | 1709 / 2848 | - | | 18 | - |
| NORTH RED POLE A2 INFIELD LIGHT | 19 | 20A/2P | - | 855 / 855 | | | - | 20A/2P | 20 | NORTH BLUE POLE A3 INFIELD LIGHT |
| | 21 | | - | | 855 / 855 | | - | | 22 | |
| NORTH RED POLE A1 INFIELD LIGHT | 23 | 20A/2P | - | | | 855 / 855 | - | 20A/2P | 24 | NORTH BLUE POLE A4 INFIELD LIGHT |
| | 25 | | - | 855 / 855 | | | - | | 26 | |
| NORTH WHITE POLE A4 INFIELD LIGHT | 27 | 20A/2P | - | | 855 / 855 | | - | 20A/2P | 28 | NORTH WHITE POLE A1 INFIELD LIGHT |
| | 29 | | - | | | 855 / 855 | - | | 30 | |
| BLANK | 31 | - | - | - | | | - | - | 32 | BLANK |
| BLANK | 33 | - | - | | - | | - | - | 34 | BLANK |
| BLANK | 35 | - | - | | | - | - | - | 36 | BLANK |
| BLANK | 37 | - | - | - | | | - | - | 38 | BLANK |
| BLANK | 39 | - | - | | - | | - | - | 40 | BLANK |
| BLANK | 41 | - | - | | | - | - | - | 42 | BLANK |

| LOAD | A | B | C |
|---|---|---|---|
| LIGHTING | 20510 | 20510 | 20510 |
| RECEPTACLES | - | - | - |
| MOTORS | - | - | - |
| OTHER | - | - | - |
| + 25% OF CONTINUOUS LOAD | 5128 | 5128 | 5128 |
| + 25% LARGEST MOTOR | - | - | - |
| TOTAL CONNECTED LOAD | 25638 | 25638 | 25638 |

TOTAL CODE LOAD = 76914 VA
MAX. CODE CURRENT = 93 AMPS

# PANELBOARD SCHEDULE

PANELBOARD: "A3" VOLTAGE: 480V 3 PH. 3 WIRE 22 KAIC
TYPE: NEW MOUNTING INSIDE SUB SES 400 AMP MAIN □ LUGS ONLY ■ BREAKER

BRANCH CIRCUITS

| CIRCUIT DESCRIPT. | CKT NO. | C/B | WIRE SIZE | VA/PHASE A | VA/PHASE B | VA/PHASE C | WIRE SIZE | C/B | CKT NO. | CIRCUIT DESCRIPT. |
|---|---|---|---|---|---|---|---|---|---|---|
| - | 1 | 30A/3P | - | 1709 / 1709 | | | - | 30A/3P | 2 | - |
| SOUTH RED POLE A8 | 3 | | - | | 1709 / 1709 | | - | | 4 | SOUTH BLUE POLE A5 |
| - | 5 | | - | | | 1709 / 1709 | - | | 6 | - |
| - | 7 | 30A/3P | - | 3988 / 3988 | | | - | 30A/3P | 8 | - |
| SOUTH RED POLE B8 | 9 | | - | | 3988 / 3988 | | - | | 10 | SOUTH BLUE POLE B5 |
| - | 11 | | - | | | 3988 / 3988 | - | | 12 | - |
| - | 13 | 30A/3P | - | 2848 / 1709 | | | - | 30A/3P | 14 | - |
| SOUTH RED POLE C10 | 15 | | - | | 2848 / 1709 | | - | | 16 | SOUTH BLUE POLE A6 |
| - | 17 | | - | | | 2848 / 1709 | - | | 18 | - |
| - | 19 | 30A/3P | - | 2848 / 3988 | | | - | 30A/3P | 20 | - |
| SOUTH RED POLE C9 | 21 | | - | | 2848 / 3988 | | - | | 22 | SOUTH BLUE POLE B6 |
| - | 23 | | - | | | 2848 / 3988 | - | | 24 | - |
| - | 25 | 30A/3P | - | 1709 / 2848 | | | - | 30A/3P | 26 | - |
| SOUTH RED POLE A7 | 27 | | - | | 1709 / 2848 | | - | | 28 | SOUTH BLUE POLE C7 |
| - | 29 | | - | | | 1709 / 2848 | - | | 30 | - |
| - | 31 | 30A/3P | - | 3988 / 2848 | | | - | 30A/3P | 32 | - |
| SOUTH RED POLE B7 | 33 | | - | | 3988 / 2848 | | - | | 34 | SOUTH BLUE POLE C8 |
| - | 35 | | - | | | 3988 / 2848 | - | | 36 | - |
| - | 37 | - | - | 25638 | | | - | 100A/3P | 38 | - |
| - | 39 | - | - | | 25638 | | - | | 40 | FEED FOR PANEL "A4" |
| - | 41 | - | - | | | 25638 | - | | 42 | - |

| LOAD | A | B | C |
|---|---|---|---|
| LIGHTING | 34180 | 34180 | 34180 |
| RECEPTACLES | - | - | - |
| MOTORS | - | - | - |
| OTHER | 25638 | 25638 | 25638 |
| + 25% OF CONTINUOUS LOAD | 8545 | 8545 | 8545 |
| + 25% LARGEST MOTOR | - | - | - |
| TOTAL CONNECTED LOAD | 68363 | 68363 | 68363 |

TOTAL CODE LOAD = 205089 VA
MAX. CODE CURRENT = 247 AMPS

# PANELBOARD SCHEDULE

PANELBOARD: "A4" VOLTAGE: 480V 3 PH. 3 WIRE 22 KAIC
TYPE: NEW MOUNTING INSIDE SUB SES 100 AMP MAIN ■ LUGS ONLY □ BREAKER

BRANCH CIRCUITS

| CIRCUIT DESCRIPT. | CKT NO. | C/B | WIRE SIZE | VA/PHASE A | VA/PHASE B | VA/PHASE C | WIRE SIZE | C/B | CKT NO. | CIRCUIT DESCRIPT. |
|---|---|---|---|---|---|---|---|---|---|---|
| - | 1 | 30A/3P | - | 1709 / 3988 | | | - | 30A/3P | 2 | - |
| SOUTH WHITE POLE A6 | 3 | | - | | 1709 / 3988 | | - | | 4 | SOUTH WHITE POLE B7 |
| - | 5 | | - | | | 1709 / 3988 | - | | 6 | - |
| - | 7 | 30A/3P | - | 3988 / 2848 | | | - | 30A/3P | 8 | - |
| SOUTH WHITE POLE B6 | 9 | | - | | 3988 / 2848 | | - | | 10 | SOUTH WHITE POLE C11 |
| - | 11 | | - | | | 3988 / 2848 | - | | 12 | - |
| - | 13 | 30A/3P | - | 1709 / 2848 | | | - | 30A/3P | 14 | - |
| SOUTH WHITE POLE A7 | 15 | | - | | 1709 / 2848 | | - | | 16 | SOUTH WHITE POLE C12 |
| - | 17 | | - | | | 1709 / 2848 | - | | 18 | - |
| SOUTH RED POLE A8 INFIELD LIGHT | 19 | 20A/2P | - | 855 / 855 | | | - | 20A/2P | 20 | SOUTH WHITE POLE A7 INFIELD LIGHT |
| | 21 | | - | | 855 / 855 | | - | | 22 | |
| SOUTH RED POLE A7 INFIELD LIGHT | 23 | 20A/2P | - | | | 855 / 855 | - | 20A/2P | 24 | SOUTH BLUE POLE A5 INFIELD LIGHT |
| | 25 | | - | 855 / 855 | | | - | | 26 | |
| SOUTH WHITE POLE A6 INFIELD LIGHT | 27 | 20A/2P | - | | 855 / 855 | | - | 20A/2P | 28 | SOUTH BLUE POLE A6 INFIELD LIGHT |
| | 29 | | - | | | 855 / 855 | - | | 30 | |
| SCOREBOARD FIELD 6 | 31 | 20A/2P | - | 600 | | | - | - | 32 | BLANK |
| | 33 | | - | | 600 | | - | - | 34 | BLANK |
| SCOREBOARD FIELD 5 | 35 | 20A/2P | - | | | 600 | - | - | 36 | BLANK |
| | 37 | | - | 600 | | | - | - | 38 | BLANK |
| SCOREBOARD FIELD 4 | 39 | 20A/2P | - | | 600 | | - | - | 40 | BLANK |
| | 41 | | - | | | 600 | - | - | 42 | BLANK |

| LOAD | A | B | C |
|---|---|---|---|
| LIGHTING | 20510 | 20510 | 20510 |
| RECEPTACLES | - | - | - |
| MOTORS | | | |
| OTHER | 1200 | 1200 | 1200 |
| + 25% OF CONTINUOUS LOAD | 5128 | 5128 | 5128 |
| + 25% LARGEST MOTOR | - | - | - |
| TOTAL CONNECTED LOAD | 26838 | 26838 | 26838 |

TOTAL CODE LOAD = 80,514 VA
MAX. CODE CURRENT = 96.8 AMPS

# PANELBOARD SCHEDULE

PANELBOARD: "B1" VOLTAGE: 120/240 1 PH. 3 WIRE 10 KAIC
TYPE: NEW MOUNTING INSIDE MAIN SES 100 AMP MAIN □ LUGS ONLY ■ BREAKER

BRANCH CIRCUITS

| CIRCUIT DESCRIPT. | CKT NO. | C/B | WIRE SIZE | VA/PHASE A | VA/PHASE B | WIRE SIZE | C/B | CKT NO. | CIRCUIT DESCRIPT. |
|---|---|---|---|---|---|---|---|---|---|
| SPARE | 1 | 20A/1P | - | 1200 | | - | 20A/1P | 2 | FIELD LIGHTS CONTROLS |
| BLANK | 3 | - | - | | 1200 | | 20A/1P | 4 | FIELD LIGHTS CONTROLS |
| BLANK | 5 | - | - | - | | - | - | 6 | BLANK |
| BLANK | 7 | - | - | | - | - | - | 8 | BLANK |
| BLANK | 9 | - | - | - | | - | - | 10 | BLANK |

| LOAD | A | B |
|---|---|---|
| LIGHTING | - | - |
| RECEPTACLES | - | - |
| MOTORS | - | - |
| OTHER | 1200 | 1200 |
| + 25% OF CONTINUOUS LOAD | - | - |
| + 25% LARGEST MOTOR | - | - |
| TOTAL CONNECTED LOAD | 1200 | 1200 |

TOTAL CODE LOAD = 2400 VA
MAX. CODE CURRENT = 10 AMPS

# PANELBOARD SCHEDULE

PANELBOARD: "B2" VOLTAGE: 120/240 1 PH. 3 WIRE 10 KAIC
TYPE: NEW MOUNTING INSIDE SUB SES 100 AMP MAIN □ LUGS ONLY ■ BREAKER

BRANCH CIRCUITS

| CIRCUIT DESCRIPT. | CKT NO. | C/B | WIRE SIZE | VA/PHASE A | VA/PHASE B | WIRE SIZE | C/B | CKT NO. | CIRCUIT DESCRIPT. |
|---|---|---|---|---|---|---|---|---|---|
| SPARE | 1 | 20A/1P | - | 1200 | | - | 20A/1P | 2 | LIGHTING CONTROL |
| BLANK | 3 | - | | | - | | 20A/1P | 4 | SPARE |
| BLANK | 5 | - | - | - | | - | - | 6 | BLANK |
| BLANK | 7 | - | - | | - | - | - | 8 | BLANK |
| BLANK | 9 | - | - | - | | - | - | 10 | BLANK |

| LOAD | A | B |
|---|---|---|
| LIGHTING | - | - |
| RECEPTACLES | - | - |
| MOTORS | - | - |
| OTHER | 1200 | - |
| + 25% OF CONTINUOUS LOAD | - | - |
| + 25% LARGEST MOTOR | - | - |
| TOTAL CONNECTED LOAD | 1200 | - |

TOTAL CODE LOAD = 1200 VA
MAX. CODE CURRENT = 5 AMPS

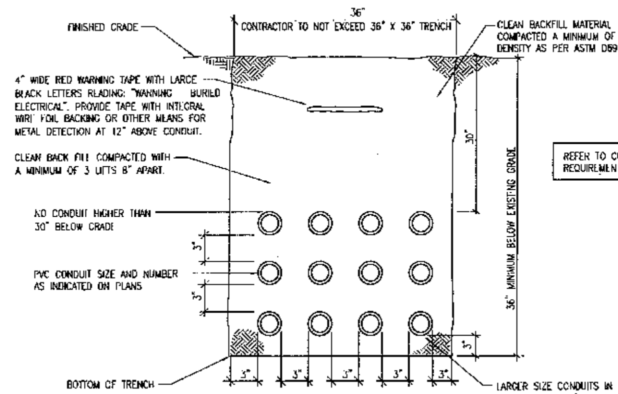


REFER TO CULTURAL RESOURCES REQUIREMENTS, SHEET ESP0.1

NOTE: ALL WORK SHALL BE IN ACCORDANCE WITH LOCAL CODES AND STANDARDS. CONTRACTOR SHALL COORDINATE EXACT REQUIREMENTS. DETAIL IS FOR BID PURPOSES. ALL EQUIREMENTS SHALL BE INCLUDED IN BASE BID.

## (A) CONDUIT TRENCH DETAIL

NOT TO SCALE

## FAULT CURRENT CALC

$$F_1 = \frac{1.732 \times 200' \times 32600'}{4 \times 18593 \times 480V} = \frac{11,292,640}{35,698,560} = .316$$

$$M_1 = \frac{1}{1+F} = \frac{1}{1.316} = 0.760$$

$$I_1 = (0.760)(32,600) = 24,776 \text{ AMPS}$$

$$F_2 = \frac{1.732 \times 20' \times 24776}{13923 \times 480} = \frac{858,241}{6,683,040} = .128$$

$$M_2 = \frac{1}{1+F} = \frac{1}{1.128} = 0.886$$

$$I_2 = (0.886)(24,776) = 21,952 \text{ AMPS}$$

$$F_3 = \frac{5.0 \times 24776 \times 480}{100,000 \times 15} = \frac{59,462,400}{1,500,000} = 39.64$$

$$M_3 = \frac{1}{1+F} = \frac{1}{40.640} = 0.025$$

$$I_3 = \frac{(0.025)(24,776)(480)}{240} = \frac{29,7312}{240} = 1239 \text{ AMPS}$$

$$F_4 = \frac{1.732 \times 540' \times 24776}{2 \times 16673 \times 480} = \frac{23,172,497}{16,006,080} = 1.448$$

$$M_4 = \frac{1}{1+F} = \frac{1}{2.448} = 0.408$$

$$I_4 = (0.408)(24,776) = 10,109 \text{ AMPS}$$

$$F_5 = \frac{1.732 \times 20' \times 10,109}{13923 \times 480} = \frac{350,176}{6,683,040} = .052$$

$$M_5 = \frac{1}{1+F} = \frac{1}{1.052} = 0.950$$

$$I_5 = (0.950)(10,109) = 9604 \text{ AMPS}$$

$$F_6 = \frac{20' \times 10,109}{3825 \times 240} = \frac{202,180}{918,000} = .220$$

$$M_6 = \frac{1}{1+F} = \frac{1}{1.220} = 0.820$$

$$I_6 = (0.820)(10,109) = 8289 \text{ AMPS}$$

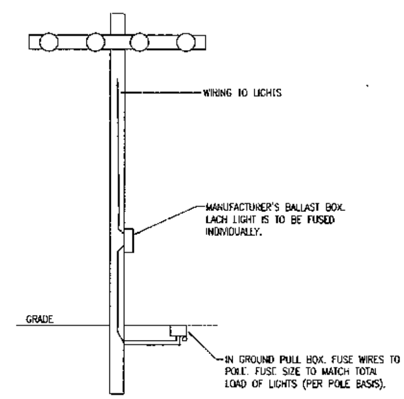


## (B) FUSING DETAIL

NOT TO SCALE

**RECORD DRAWINGS:**
DRAWINGS ISSUED BY R.A. ALCALA & ASSOCIATES, INC. (RAAI). UPON THE COMPLETION OF ELECTRICAL CONSTRUCTION, THESE DRAWINGS ARE BASED UPON THE MARKED UP DRAWINGS AND OTHER DATA FURNISHED TO RAAI BY THE ELECTRICAL CONTRACTOR ON AUG. 4, 2009, SHOWING SIGNIFICANT CHANGES IN THE INSTALLATION MADE DURING CONSTRUCTION. RAAI MAKES NO WARRANTY OF THE ACCURACY OR COMPLETENESS OF THE DRAWINGS.

BASE BID

800-782-5348
Blue Stake Center
CALL COLLECT

SPORTS FIELD LIGHTING PROJECT
SOCCER FIELD LIGHTING
BRANDI FENTON MEMORIAL PARK

PANEL SCHEDULES


RAALCALA & Associates, Inc
consulting electrical engineering
2560 N. Coyote Dr., Suite 103
Tucson, Az. 85745
(520) 623-7773


14857 ROBERT A. ALCALA
ARIZONA U.S.A.
EXPIRES 3/31/2011

PROJ. NO: 08027
DATE: 07/22/08
DESIGNED BY: RAA2
CHECKED BY: RAA
DRAWN BY: AR
REVISIONS:
1 P.C. REVIEW COMMENTS OF 8/1/08
2 AS BUILT CHANGES 8/7/09

ESP5.0

## EQUIPMENT LIST FOR AREAS SHOWN

| Pole | | | | Luminaires | | | | |
|---|---|---|---|---|---|---|---|---|
| QTY | LOCATION | SIZE | GRADE ELEVATION | MOUNTING HEIGHT | LAMP TYPE | QTY / POLE | THIS GRID | OTHER GRIDS |
| 1 | A1 | 60' | - | 60' | 1500W MZ | 4/4* | 3 | 5 |
| 1 | A2 | 60' | - | 60' | 1500W MZ | 4 | 3 | 1 |
| 1 | B1 | 70' | - | 70' | 1500W MZ | 8/8* | 8 | 8 |
| 1 | B2 | 70' | - | 70' | 1500W MZ | 8 | 8 | 0 |
| 2 | C1-C2 | 70' | - | 70' | 1500W MZ | 6 | 6 | 0 |
| 6 | ← TOTALS → | | | | | 48 | 34 | 14 |

* This structure utilizes a back-to-back mounting configuration

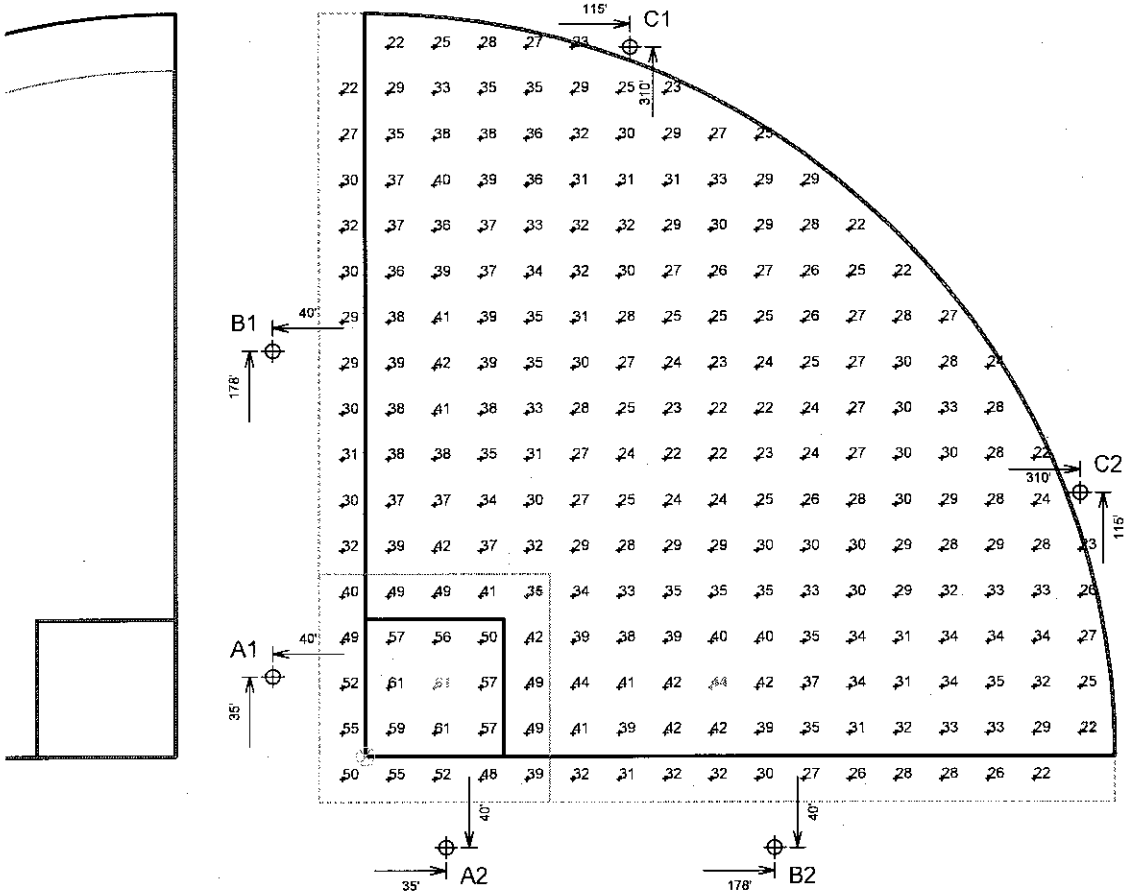


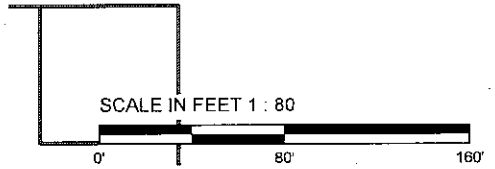


Pole location(s) ⊕ dimensions are relative to 0,0 reference point(s) ⊗

musco
GREEN GENERATION LIGHTING™

**GUARANTEED PERFORMANCE**

# ILLUMINATION SUMMARY

**Softball 1**
Tucson Sports Complex
Tucson, AZ

**Softball 1**
- Size: 325'/325'/325' - 60' Basepath
- Grid Spacing = 20.0' x 20.0'
- Values given at 3.0' above grade

| | |
|---|---|
| · Luminaire Type: | Green Generation |
| · Rated Lamp Life: | 5000 hours |
| · Avg Lumens/Lamp: | 134,000 |

**CONSTANT ILLUMINATION HORIZONTAL FOOTCANDLES**

| | Infield | Outfield |
|---|---|---|
| No. of Target Points: | 25 | 211 |
| Average: | 50.9 | 31.0 |
| Maximum: | 61 | 44 |
| Minimum: | 35 | 22 |
| Avg/Min: | 1.44 | 1.42 |
| Max/Min: | 1.73 | 2.00 |
| UG (Adjacent Pts): | 1.27 | 1.34 |
| CV: | 0.14 | 0.18 |

| | |
|---|---|
| Average Lamp Tilt Factor: | 1.000 |
| Number of Luminaires: | 34 |
| Avg KW over 5000 hours: | 53.18 |
| Max KW: | 57.8 |

**Guaranteed Performance:** The CONSTANT ILLUMINATION described above is guaranteed for the rated life of the lamp.

**Field Measurements:** Averages shall be +/-10% in accordance with IESNA RP-6-01 and CIBSE LG4. Individual measurements may vary from computer predictions.

**Electrical System Requirements:** Refer to Amperage Draw Chart and/or the **"Musco Control System Summary"** for electrical sizing.

**Installation Requirements:** Results assume +/- 3% nominal voltage at line side of the ballast and structures located within 3 feet (1m) of design locations.

By: Matt Pearson

File #: 130819Prod Date: 05-Feb-09

Not to be reproduced in whole or part without the written consent of Musco Lighting. ©1981, 2009 Musco Lighting

Print Date (05/Feb/2009) & Time (16:19)

## EQUIPMENT LIST FOR AREAS SHOWN

| Pole | | | | Luminaires | | | | |
|---|---|---|---|---|---|---|---|---|
| QTY | LOCATION | SIZE | GRADE ELEVATION | MOUNTING HEIGHT | LAMP TYPE | QTY / POLE | THIS GRID | OTHER GRIDS |
| 1 | A1 | 60' | - | 60' | 1500W MZ | 4/4* | 1 | 7 |
| 1 | A2 | 60' | - | 60' | 1500W MZ | 4 | 1 | 3 |
| 2 | ← TOTALS → | | | | | 12 | 2 | 10 |

* This structure utilizes a back-to-back mounting configuration

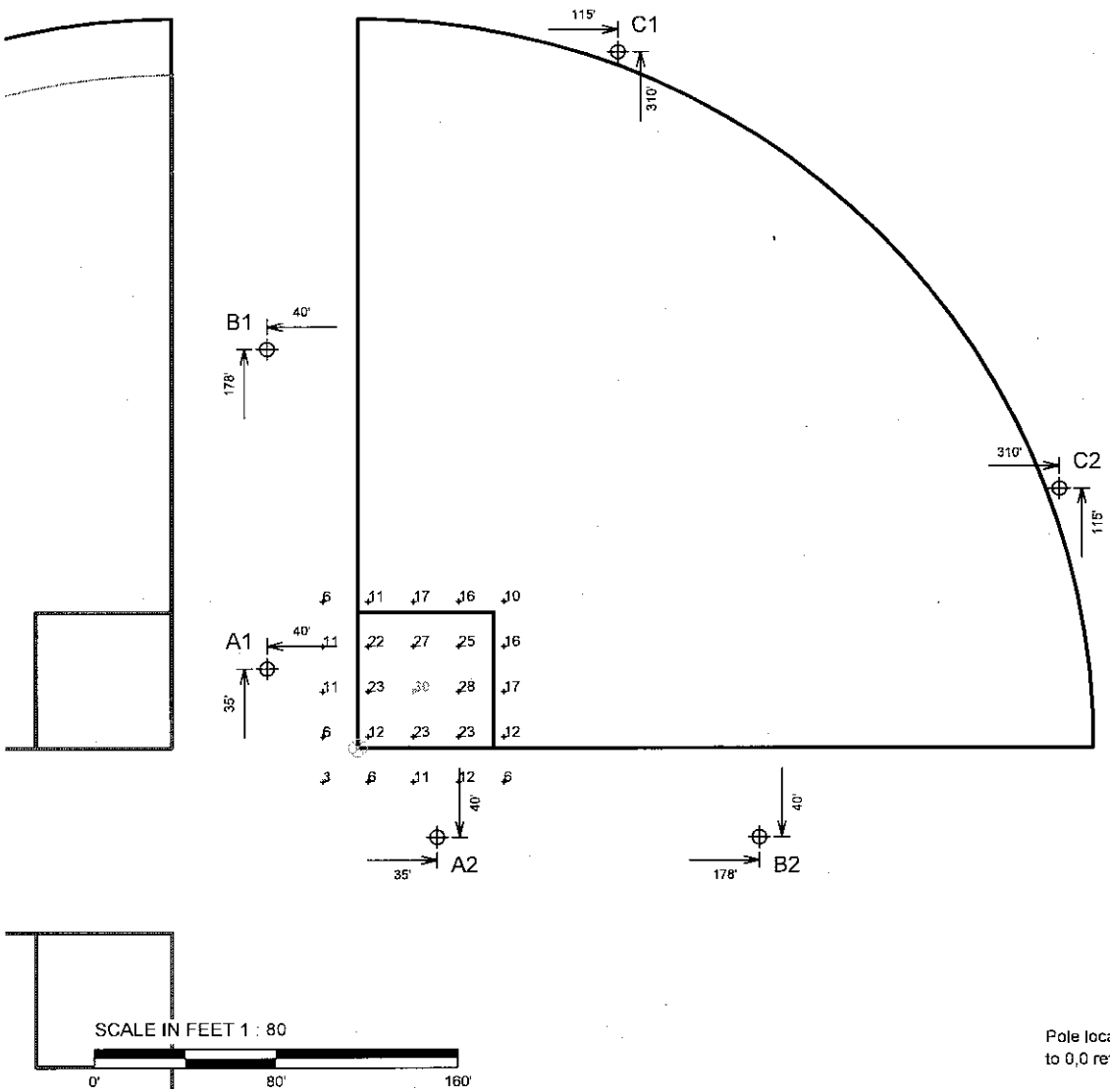


Pole location(s) ⊕ dimensions are relative to 0,0 reference point(s) ⊗

GREEN GENERATION LIGHTING™

**GUARANTEED PERFORMANCE**

# ILLUMINATION SUMMARY

**Softball 1**
Tucson Sports Complex
Tucson, AZ

**Softball 1 Maintenance**
- Size: 325'/325'/325' - 60' Basepath
- Grid Spacing = 20.0' x 20.0'
- Values given at 3.0' above grade

| | |
|---|---|
| · Luminaire Type: | Green Generation |
| · Rated Lamp Life: | 5000 hours |
| · Avg Lumens/Lamp: | 134,000 |

**CONSTANT ILLUMINATION HORIZONTAL FOOTCANDLES**

| | Entire Grid |
|---|---|
| No. of Target Points: | 25 |
| Average: | 15.4 |
| Maximum: | 30 |
| Minimum: | 3 |
| Avg/Min: | 5.21 |
| Max/Min: | 10.09 |
| UG (Adjacent Pts): | 2.13 |
| CV: | 0.51 |

| | |
|---|---|
| Average Lamp Tilt Factor: | 1.000 |
| Number of Luminaires: | 2 |
| Avg KW over 5000 hours: | 3.13 |
| Max KW: | 3.4 |

**Guaranteed Performance:** The CONSTANT ILLUMINATION described above is guaranteed for the rated life of the lamp.

**Field Measurements:** Averages shall be +/-10% in accordance with IESNA RP-6-01 and CIBSE LG4. Individual measurements may vary from computer predictions.

**Electrical System Requirements:** Refer to Amperage Draw Chart and/or the **"Musco Control System Summary"** for electrical sizing.

**Installation Requirements:** Results assume +/- 3% nominal voltage at line side of the ballast and structures located within 3 feet (1m) of design locations.

By: Matt Pearson

File #: 130819Prod Date: 05-Feb-09

Not to be reproduced in whole or part without the written consent of Musco Lighting. ©1981, 2009 Musco Lighting

Print Date (05/Feb/2009) & Time (16:19)

## EQUIPMENT LIST FOR AREAS SHOWN

| Pole | | | | Luminaires | | | | |
|---|---|---|---|---|---|---|---|---|
| QTY | LOCATION | SIZE | GRADE ELEVATION | MOUNTING HEIGHT | LAMP TYPE | QTY / POLE | THIS GRID | OTHER GRIDS |
| 2 | A1, A4 | 60' | - | 60' | 1500W MZ | 4/4* | 3 | 5 |
| 2 | B1, B4 | 70' | - | 70' | 1500W MZ | 8/8* | 8 | 8 |
| 2 | C5-C6 | 70' | - | 70' | 1500W MZ | 6 | 6 | 0 |
| 6 | ← TOTALS → | | | | | 60 | 34 | 26 |

* This structure utilizes a back-to-back mounting configuration

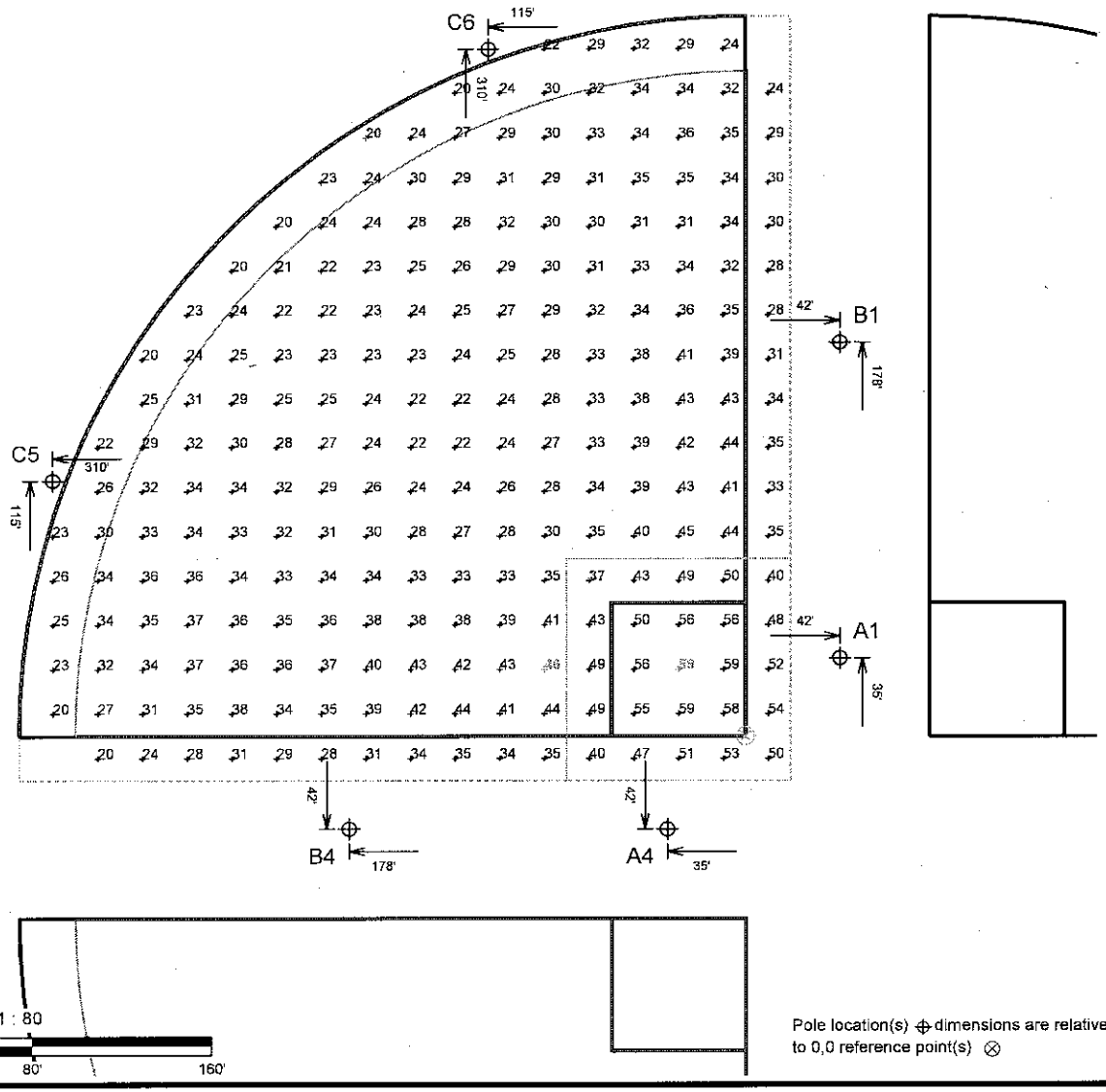


Pole location(s) ⊕ dimensions are relative to 0,0 reference point(s) ⊗

**GUARANTEED PERFORMANCE**

## ILLUMINATION SUMMARY

**Softball 2**
Tucson Sports Complex
Tucson, AZ

**Softball 2**
- Size: 325'/325'/325' - 60' Basepath
- Grid Spacing = 20.0' x 20.0'
- Values given at 3.0' above grade

| | |
|---|---|
| · Luminaire Type: | Green Generation |
| · Rated Lamp Life: | 5000 hours |
| · Avg Lumens/Lamp: | 134,000 |

**CONSTANT ILLUMINATION HORIZONTAL FOOTCANDLES**

| | Infield | Outfield |
|---|---|---|
| No. of Target Points: | 25 | 211 |
| Average: | 50.5 | 30.9 |
| Maximum: | 59 | 46 |
| Minimum: | 37 | 20 |
| Avg/Min: | 1.35 | 1.58 |
| Max/Min: | 1.59 | 2.34 |
| UG (Adjacent Pts): | 1.23 | 1.37 |
| CV: | 0.12 | 0.20 |

| | |
|---|---|
| Average Lamp Tilt Factor: | 1.000 |
| Number of Luminaires: | 34 |
| Avg KW over 5000 hours: | 53.18 |
| Max KW: | 57.8 |

**Guaranteed Performance:** The CONSTANT ILLUMINATION described above is guaranteed for the rated life of the lamp.

**Field Measurements:** Averages shall be +/-10% in accordance with IESNA RP-6-01 and CIBSE LG4. Individual measurements may vary from computer predictions.

**Electrical System Requirements:** Refer to Amperage Draw Chart and/or the **"Musco Control System Summary"** for electrical sizing.

**Installation Requirements:** Results assume +/- 3% nominal voltage at line side of the ballast and structures located within 3 feet (1m) of design locations.

By: Matt Pearson

File #: 130819Prod Date: 05-Feb-09

Not to be reproduced in whole or part without the written consent of Musco Lighting. ©1981, 2009 Musco Lighting

Print Date (05/Feb/2009) & Time (16:19)

## EQUIPMENT LIST FOR AREAS SHOWN

| Pole | | | | Luminaires | | | | |
|---|---|---|---|---|---|---|---|---|
| QTY | LOCATION | SIZE | GRADE ELEVATION | MOUNTING HEIGHT | LAMP TYPE | QTY / POLE | THIS GRID | OTHER GRIDS |
| 2 | A1, A4 | 60' | - | 60' | 1500W MZ | 4/4* | 1 | 7 |
| 2 | ← TOTALS → | | | | | 16 | 2 | 14 |

* This structure utilizes a back-to-back mounting configuration

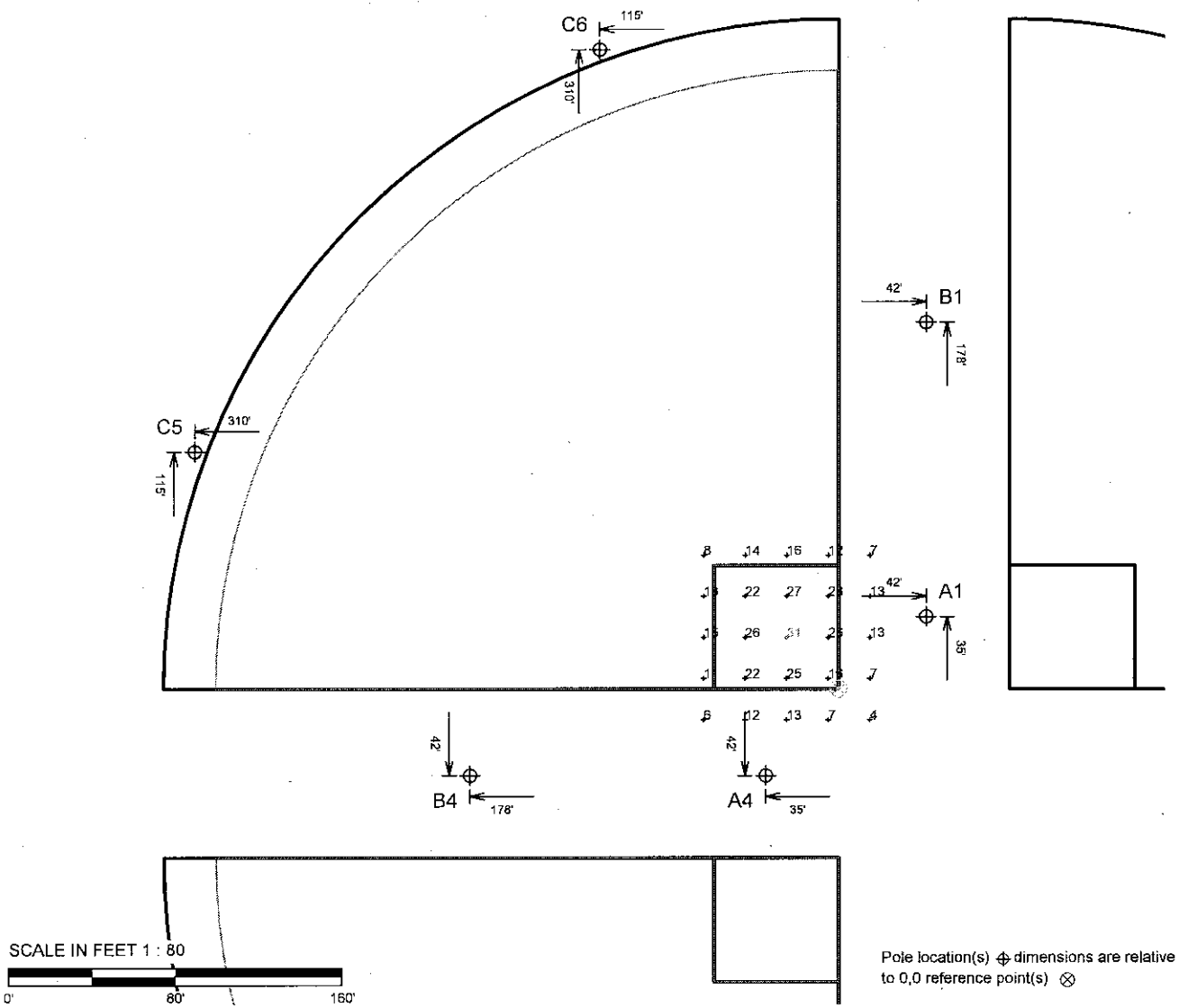


Pole location(s) ⊕ dimensions are relative to 0,0 reference point(s) ⊗

**GUARANTEED PERFORMANCE**

## ILLUMINATION SUMMARY

**Softball 2**
Tucson Sports Complex
Tucson, AZ

**Softball 2 Maintenance**
- Size: 325'/325'/325' - 60' Basepath
- Grid Spacing = 20.0' x 20.0'
- Values given at 3.0' above grade

| | |
|---|---|
| · Luminaire Type: | Green Generation |
| · Rated Lamp Life: | 5000 hours |
| · Avg Lumens/Lamp: | 134,000 |

**CONSTANT ILLUMINATION HORIZONTAL FOOTCANDLES**

| | Entire Grid |
|---|---|
| No. of Target Points: | 25 |
| Average: | 15.5 |
| Maximum: | 31 |
| Minimum: | 4 |
| Avg/Min: | 4.02 |
| Max/Min: | 7.99 |
| UG (Adjacent Pts): | 2.26 |
| CV: | 0.49 |

| | |
|---|---|
| Average Lamp Tilt Factor: | 1.000 |
| Number of Luminaires: | 2 |
| Avg KW over 5000 hours: | 3.13 |
| Max KW: | 3.4 |

**Guaranteed Performance:** The CONSTANT ILLUMINATION described above is guaranteed for the rated life of the lamp.

**Field Measurements:** Averages shall be +/-10% in accordance with IESNA RP-6-01 and CIBSE LG4. Individual measurements may vary from computer predictions.

**Electrical System Requirements:** Refer to Amperage Draw Chart and/or the "**Musco Control System Summary**" for electrical sizing.

**Installation Requirements:** Results assume +/- 3% nominal voltage at line side of the ballast and structures located within 3 feet (1m) of design locations.

By: Matt Pearson

File #: 130819Prod Date: 05-Feb-09

Not to be reproduced in whole or part without the written consent of Musco Lighting. ©1981, 2009 Musco Lighting

Print Date (05/Feb/2009) & Time (16:19)

## EQUIPMENT LIST FOR AREAS SHOWN

| Pole | | | | Luminaires | | | | |
|---|---|---|---|---|---|---|---|---|
| QTY | LOCATION | SIZE | GRADE ELEVATION | MOUNTING HEIGHT | LAMP TYPE | QTY / POLE | THIS GRID | OTHER GRIDS |
| 1 | A3 | 60' | - | 60' | 1500W MZ | 4 | 3 | 1 |
| 1 | A4 | 60' | - | 60' | 1500W MZ | 4/4* | 3 | 5 |
| 1 | B3 | 70' | - | 70' | 1500W MZ | 8 | 8 | 0 |
| 1 | B4 | 70' | - | 70' | 1500W MZ | 8/8* | 8 | 8 |
| 2 | C3-C4 | 70' | - | 70' | 1500W MZ | 6 | 6 | 0 |
| 6 | ← TOTALS → | | | | | 48 | 34 | 14 |

* This structure utilizes a back-to-back mounting configuration

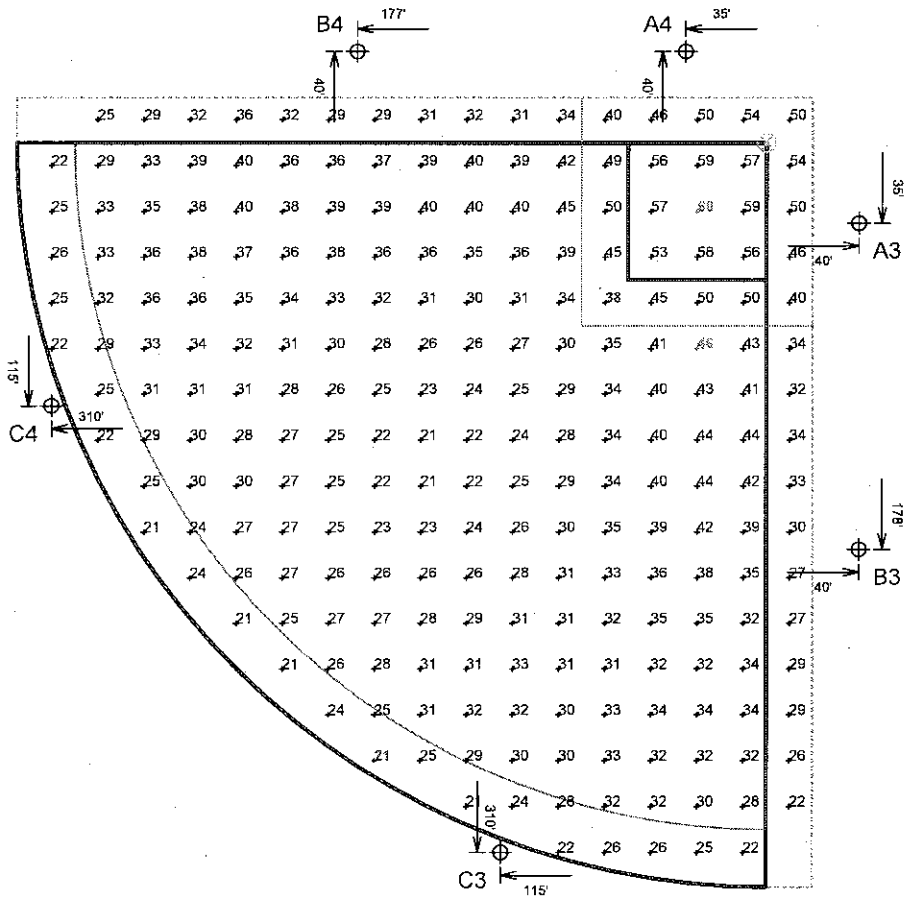


SCALE IN FEET 1 : 80

0' 80' 160'

Pole location(s) ⊕ dimensions are relative to 0,0 reference point(s) ⊗

MUSCO GREEN GENERATION LIGHTING™

**GUARANTEED PERFORMANCE**

## ILLUMINATION SUMMARY

**Softball 3**
Tucson Sports Complex
Tucson, AZ

**Softball 3**
- Size: 325'/325'/325' - 60' Basepath
- Grid Spacing = 20.0' x 20.0'
- Values given at 3.0' above grade

| | |
|---|---|
| Luminaire Type: | Green Generation |
| Rated Lamp Life: | 5000 hours |
| Avg Lumens/Lamp: | 134,000 |

**CONSTANT ILLUMINATION HORIZONTAL FOOTCANDLES**

| | Infield | Outfield |
|---|---|---|
| No. of Target Points: | 25 | 211 |
| Average: | 50.8 | 31.0 |
| Maximum: | 60 | 46 |
| Minimum: | 38 | 21 |
| Avg/Min: | 1.33 | 1.50 |
| Max/Min: | 1.57 | 2.23 |
| UG (Adjacent Pts): | 1.25 | 1.35 |
| CV: | 0.12 | 0.19 |

| | |
|---|---|
| Average Lamp Tilt Factor: | 1.000 |
| Number of Luminaires: | 34 |
| Avg KW over 5000 hours: | 53.18 |
| Max KW: | 57.8 |

**Guaranteed Performance:** The CONSTANT ILLUMINATION described above is guaranteed for the rated life of the lamp.

**Field Measurements:** Averages shall be +/-10% in accordance with IESNA RP-6-01 and CIBSE LG4. Individual measurements may vary from computer predictions.

**Electrical System Requirements:** Refer to Amperage Draw Chart and/or the **"Musco Control System Summary"** for electrical sizing.

**Installation Requirements:** Results assume +/- 3% nominal voltage at line side of the ballast and structures located within 3 feet (1m) of design locations.

By: Matt Pearson

File #: 130819Prod Date: 05-Feb-09

Not to be reproduced in whole or part without the written consent of Musco Lighting. ©1981, 2009 Musco Lighting

Print Date (05/Feb/2009) & Time (16:19)

## EQUIPMENT LIST FOR AREAS SHOWN

| Pole | | | | Luminaires | | | | |
|---|---|---|---|---|---|---|---|---|
| QTY | LOCATION | SIZE | GRADE ELEVATION | MOUNTING HEIGHT | LAMP TYPE | QTY/ POLE | THIS GRID | OTHER GRIDS |
| 1 | A3 | 60' | - | 60' | 1500W MZ | 4 | 1 | 3 |
| 1 | A4 | 60' | - | 60' | 1500W MZ | 4/4* | 1 | 7 |
| 2 | ← TOTALS → | | | | | 12 | 2 | 10 |

* This structure utilizes a back-to-back mounting configuration

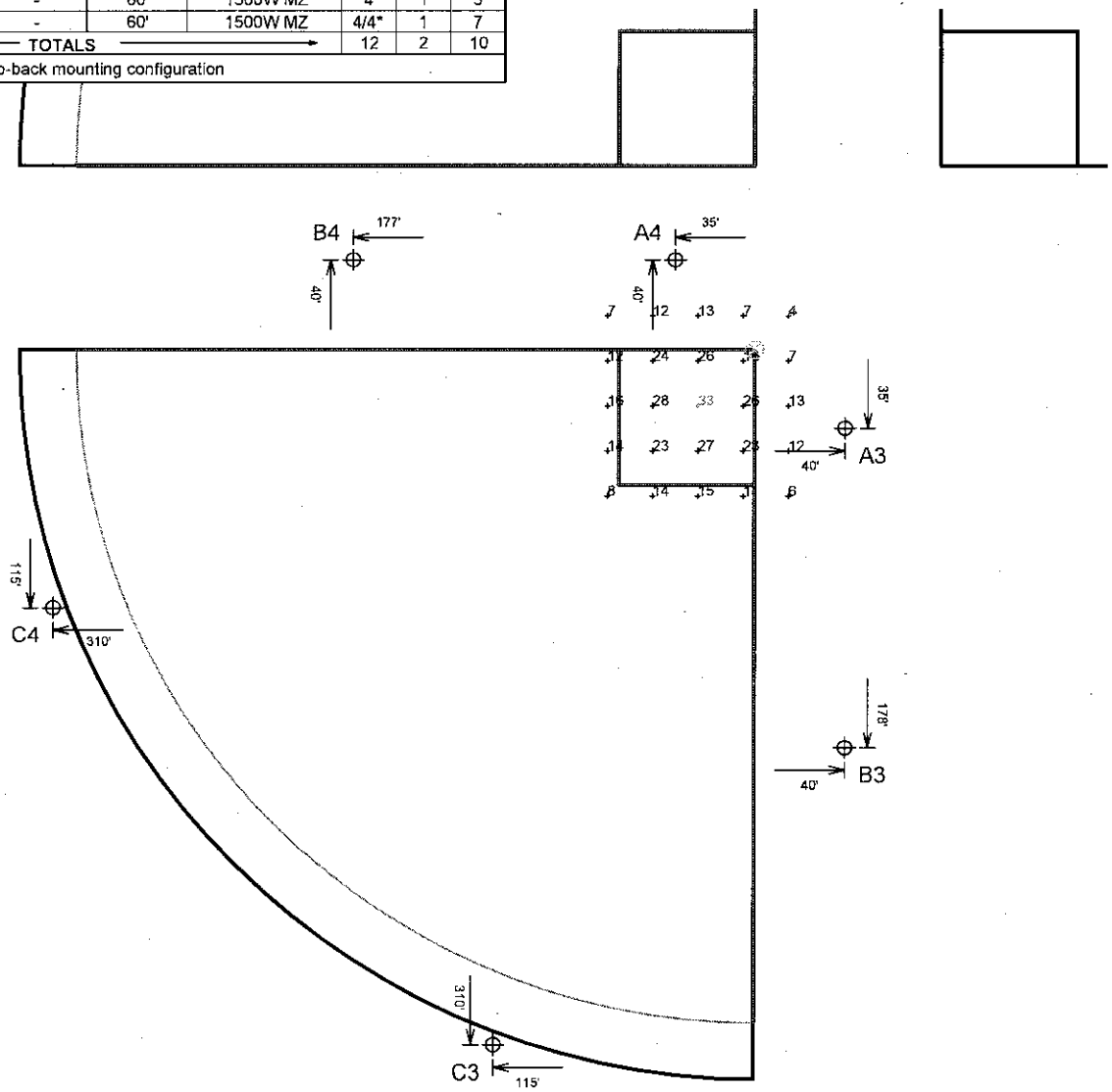


SCALE IN FEET 1 : 80

0' 80' 160'

Pole location(s) ⊕ dimensions are relative to 0,0 reference point(s) ⊗

MUSCO GREEN GENERATION LIGHTING™

GUARANTEED PERFORMANCE

## ILLUMINATION SUMMARY

**Softball 3**
Tucson Sports Complex
Tucson, AZ

**Softball 3 Maintenance**
- Size: 325'/325'/325' - 60' Basepath
- Grid Spacing = 20.0' x 20.0'
- Values given at 3.0' above grade

| | |
|---|---|
| · Luminaire Type: | Green Generation |
| · Rated Lamp Life: | 5000 hours |
| · Avg Lumens/Lamp: | 134,000 |

**CONSTANT ILLUMINATION HORIZONTAL FOOTCANDLES**

| | Entire Grid |
|---|---|
| No. of Target Points: | 25 |
| Average: | 15.9 |
| Maximum: | 33 |
| Minimum: | 4 |
| Avg/Min: | 4.18 |
| Max/Min: | 8.54 |
| UG (Adjacent Pts): | 2.30 |
| CV: | 0.51 |

| | |
|---|---|
| Average Lamp Tilt Factor: | 1.000 |
| Number of Luminaires: | 2 |
| Avg KW over 5000 hours: | 3.13 |
| Max KW: | 3.4 |

**Guaranteed Performance:** The CONSTANT ILLUMINATION described above is guaranteed for the rated life of the lamp.

**Field Measurements:** Averages shall be +/-10% in accordance with IESNA RP-6-01 and CIBSE LG4. Individual measurements may vary from computer predictions.

**Electrical System Requirements:** Refer to Amperage Draw Chart and/or the **"Musco Control System Summary"** for electrical sizing.

**Installation Requirements:** Results assume +/- 3% nominal voltage at line side of the ballast and structures located within 3 feet (1m) of design locations.

By: Matt Pearson

File #: 130819Prod Date: 05-Feb-09

Not to be reproduced in whole or part without the written consent of Musco Lighting. ©1981, 2009 Musco Lighting

Print Date (05/Feb/2009) & Time (16:19)

## EQUIPMENT LIST FOR AREAS SHOWN

| Pole | | | | Luminaires | | | | |
|---|---|---|---|---|---|---|---|---|
| QTY | LOCATION | SIZE | GRADE ELEVATION | MOUNTING HEIGHT | LAMP TYPE | QTY / POLE | THIS GRID | OTHER GRIDS |
| 1 | A5 | 60' | - | 60' | 1500W MZ | 4 | 3 | 1 |
| 1 | A6 | 60' | - | 60' | 1500W MZ | 4/4* | 3 | 5 |
| 1 | B5 | 70' | - | 70' | 1500W MZ | 8 | 8 | 0 |
| 1 | B6 | 70' | - | 70' | 1500W MZ | 8/8* | 8 | 8 |
| 2 | C7-C8 | 70' | - | 70' | 1500W MZ | 6 | 6 | 0 |
| 6 | ← TOTALS → | | | | | 48 | 34 | 14 |

* This structure utilizes a back-to-back mounting configuration

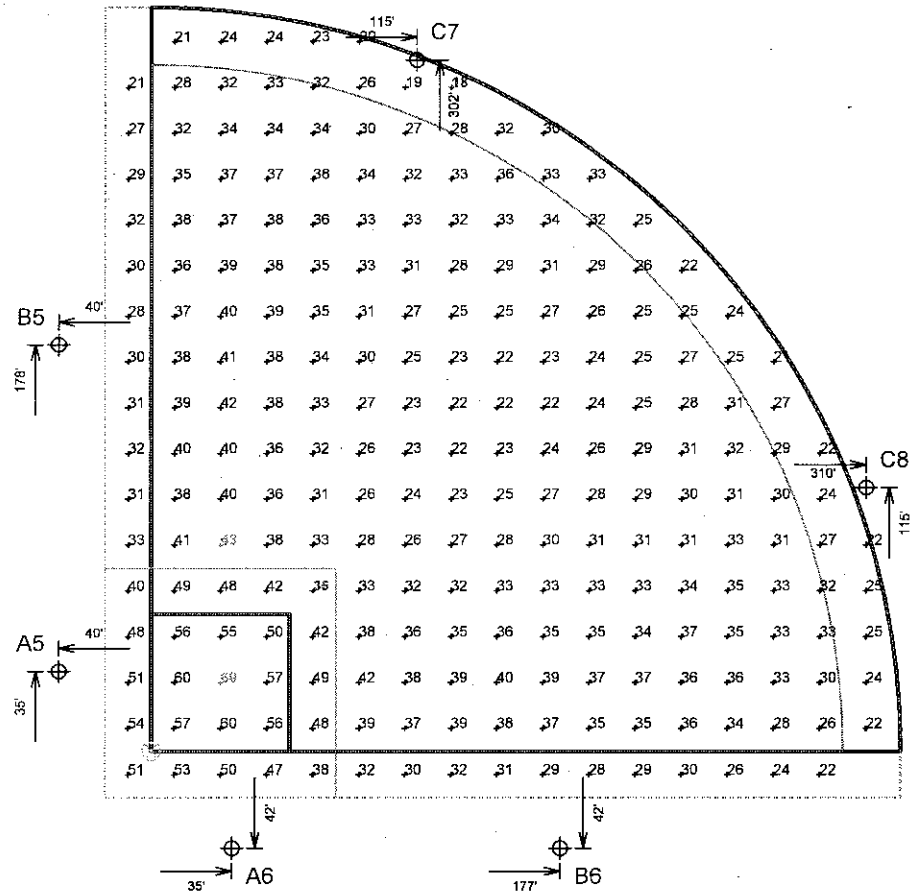


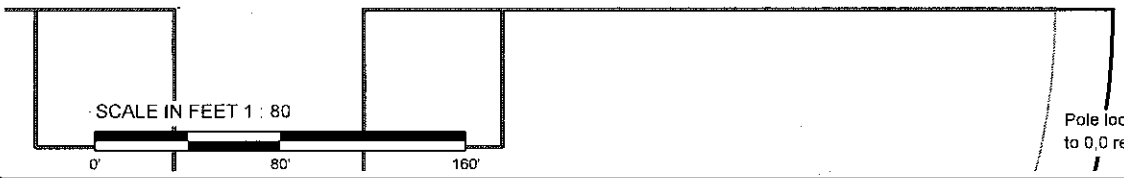


Pole location(s) ⊕ dimensions are relative to 0,0 reference point(s) ⊗

**GUARANTEED PERFORMANCE**

## ILLUMINATION SUMMARY

**Softball 4**
Tucson Sports Complex
Tucson, AZ

**Softball 4**
- Size: 325'/325'/325' - 60' Basepath
- Grid Spacing = 20.0' x 20.0'
- Values given at 3.0' above grade

- Luminaire Type: Green Generation
- Rated Lamp Life: 5000 hours
- Avg Lumens/Lamp: 134,000

**CONSTANT ILLUMINATION HORIZONTAL FOOTCANDLES**

| | Infield | Outfield |
|---|---|---|
| No. of Target Points: | 25 | 211 |
| Average: | 50.3 | 30.9 |
| Maximum: | 60 | 43 |
| Minimum: | 35 | 18 |
| Avg/Min: | 1.42 | 1.75 |
| Max/Min: | 1.70 | 2.44 |
| UG (Adjacent Pts): | 1.28 | 1.62 |
| CV: | 0.14 | 0.18 |

| | |
|---|---|
| Average Lamp Tilt Factor: | 1.000 |
| Number of Luminaires: | 34 |
| Avg KW over 5000 hours: | 53.18 |
| Max KW: | 57.8 |

**Guaranteed Performance:** The CONSTANT ILLUMINATION described above is guaranteed for the rated life of the lamp.

**Field Measurements:** Averages shall be +/-10% in accordance with IESNA RP-6-01 and CIBSE LG4. Individual measurements may vary from computer predictions.

**Electrical System Requirements:** Refer to Amperage Draw Chart and/or the **"Musco Control System Summary"** for electrical sizing.

**Installation Requirements:** Results assume +/- 3% nominal voltage at line side of the ballast and structures located within 3 feet (1m) of design locations.

By: Matt Pearson

File #: 130819Prod Date: 05-Feb-09

Not to be reproduced in whole or part without the written consent of Musco Lighting. ©1981, 2009 Musco Lighting

Print Date (05/Feb/2009) & Time (16:19)

## EQUIPMENT LIST FOR AREAS SHOWN

| Pole | | | | Luminaires | | | | |
|---|---|---|---|---|---|---|---|---|
| QTY | LOCATION | SIZE | GRADE ELEVATION | MOUNTING HEIGHT | LAMP TYPE | QTY / POLE | THIS GRID | OTHER GRIDS |
| 1 | A5 | 60' | - | 60' | 1500W MZ | 4 | 1 | 3 |
| 1 | A6 | 60' | - | 60' | 1500W MZ | 4/4* | 1 | 7 |
| 2 | ← TOTALS → | | | | | 12 | 2 | 10 |

* This structure utilizes a back-to-back mounting configuration

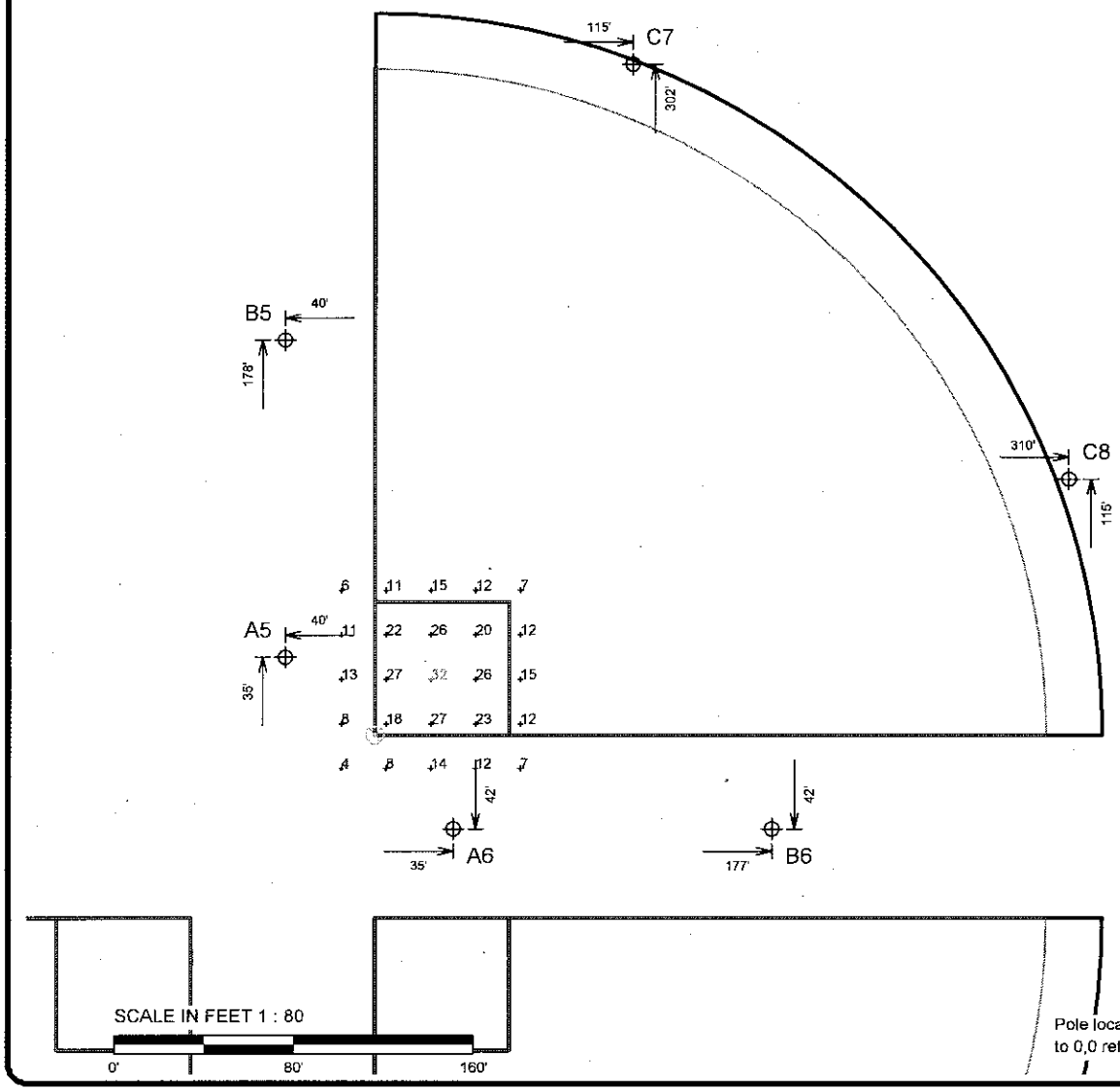


Pole location(s) ⊕ dimensions are relative to 0,0 reference point(s) ⊗

GREEN GENERATION LIGHTING™

**GUARANTEED PERFORMANCE**

## ILLUMINATION SUMMARY

**Softball 4**
Tucson Sports Complex
Tucson, AZ

**Softball 4 Maintenance**
- Size: 325'/325'/325' - 60' Basepath
- Grid Spacing = 20.0' x 20.0'
- Values given at 3.0' above grade

| | |
|---|---|
| · Luminaire Type: | Green Generation |
| · Rated Lamp Life: | 5000 hours |
| · Avg Lumens/Lamp: | 134,000 |

**CONSTANT ILLUMINATION HORIZONTAL FOOTCANDLES**

| | Entire Grid |
|---|---|
| No. of Target Points: | 25 |
| Average: | 15.5 |
| Maximum: | 32 |
| Minimum: | 4 |
| Avg/Min: | 3.72 |
| Max/Min: | 7.64 |
| UG (Adjacent Pts): | 2.35 |
| CV: | 0.50 |

| | |
|---|---|
| Average Lamp Tilt Factor: | 1.000 |
| Number of Luminaires: | 2 |
| Avg KW over 5000 hours: | 3.13 |
| Max KW: | 3.4 |

**Guaranteed Performance:** The CONSTANT ILLUMINATION described above is guaranteed for the rated life of the lamp.

**Field Measurements:** Averages shall be +/-10% in accordance with IESNA RP-6-01 and CIBSE LG4. Individual measurements may vary from computer predictions.

**Electrical System Requirements:** Refer to Amperage Draw Chart and/or the **"Musco Control System Summary"** for electrical sizing.

**Installation Requirements:** Results assume +/- 3% nominal voltage at line side of the ballast and structures located within 3 feet (1m) of design locations.

By: Matt Pearson

File #: 130819Prod Date: 05-Feb-09

Not to be reproduced in whole or part without the written consent of Musco Lighting. ©1981, 2009 Musco Lighting

Print Date (05/Feb/2009) & Time (16:19)

## EQUIPMENT LIST FOR AREAS SHOWN

| Pole | | | | Luminaires | | | | |
|---|---|---|---|---|---|---|---|---|
| QTY | LOCATION | SIZE | GRADE ELEVATION | MOUNTING HEIGHT | LAMP TYPE | QTY / POLE | THIS GRID | OTHER GRIDS |
| 2 | A6-A7 | 60' | - | 60' | 1500W MZ | 4/4* | 3 | 5 |
| 2 | B6-B7 | 70' | - | 70' | 1500W MZ | 8/8* | 8 | 8 |
| 2 | C10, C9 | 70' | - | 70' | 1500W MZ | 6 | 6 | 0 |
| 6 | ← TOTALS → | | | | | 60 | 34 | 26 |

* This structure utilizes a back-to-back mounting configuration

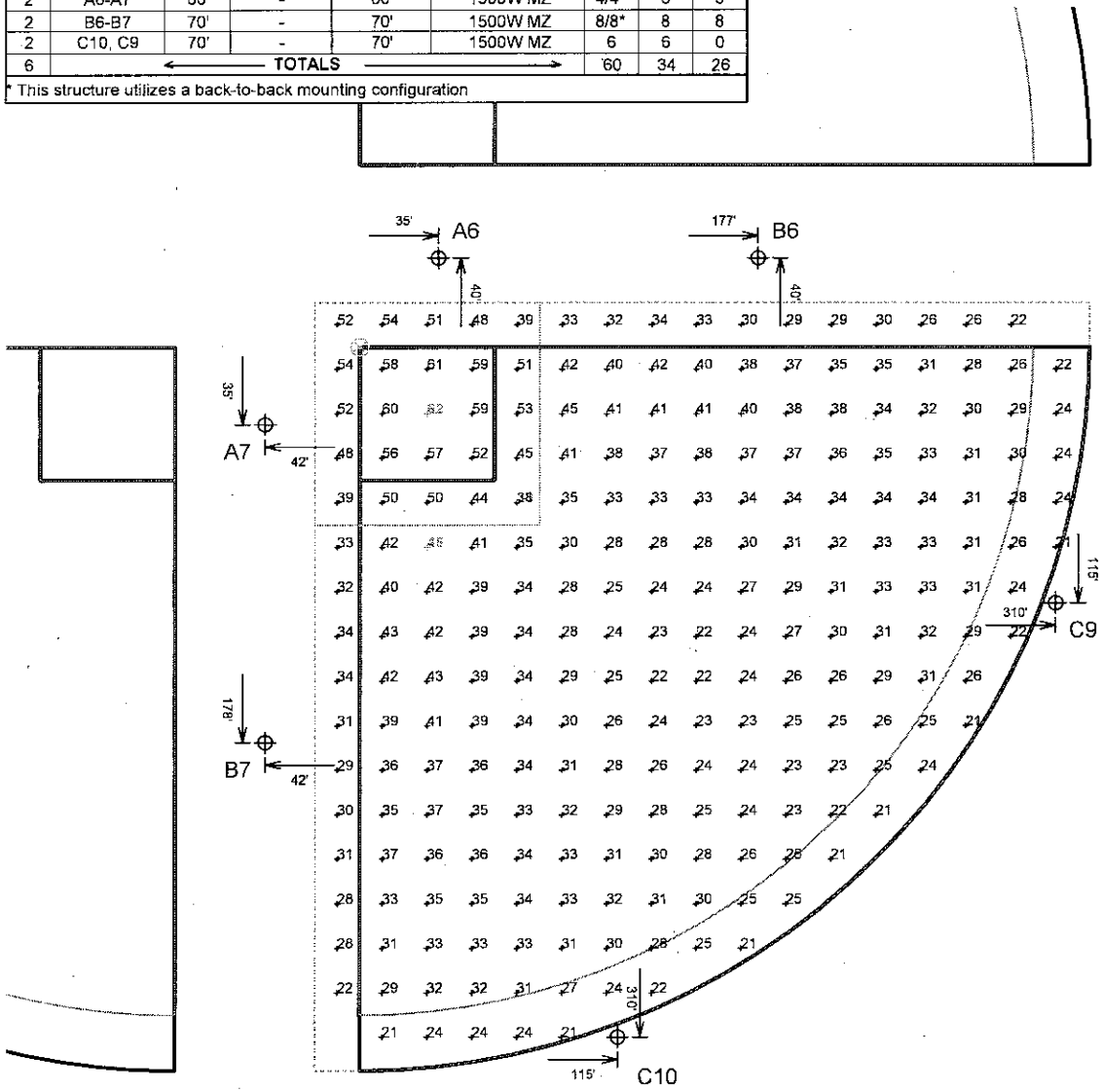


SCALE IN FEET 1 : 80

0' 80' 160'

Pole location(s) ⊕ dimensions are relative to 0,0 reference point(s) ⊗

GREEN GENERATION LIGHTING™

**GUARANTEED PERFORMANCE**

## ILLUMINATION SUMMARY

**Softball 5**
Tucson Sports Complex
Tucson, AZ

**Softball 5**
- Size: 325'/325'/325' - 60' Basepath
- Grid Spacing = 20.0' x 20.0'
- Values given at 3.0' above grade

| | |
|---|---|
| · Luminaire Type: | Green Generation |
| · Rated Lamp Life: | 5000 hours |
| · Avg Lumens/Lamp: | 134,000 |

**CONSTANT ILLUMINATION HORIZONTAL FOOTCANDLES**

| | Infield | Outfield |
|---|---|---|
| No. of Target Points: | 25 | 211 |
| Average: | 51.6 | 30.8 |
| Maximum: | 62 | 45 |
| Minimum: | 38 | 21 |
| Avg/Min: | 1.36 | 1.47 |
| Max/Min: | 1.63 | 2.16 |
| UG (Adjacent Pts): | 1.30 | 1.37 |
| CV: | 0.13 | 0.19 |

| | |
|---|---|
| Average Lamp Tilt Factor: | 1.000 |
| Number of Luminaires: | 34 |
| Avg KW over 5000 hours: | 53.18 |
| Max KW: | 57.8 |

**Guaranteed Performance:** The CONSTANT ILLUMINATION described above is guaranteed for the rated life of the lamp.

**Field Measurements:** Averages shall be +/-10% in accordance with IESNA RP-6-01 and CIBSE LG4. Individual measurements may vary from computer predictions.

**Electrical System Requirements:** Refer to Amperage Draw Chart and/or the **"Musco Control System Summary"** for electrical sizing.

**Installation Requirements:** Results assume +/- 3% nominal voltage at line side of the ballast and structures located within 3 feet (1m) of design locations.

By: Matt Pearson

File #: 130819Prod Date: 05-Feb-09

Not to be reproduced in whole or part without the written consent of Musco Lighting. ©1981, 2009 Musco Lighting

Print Date (05/Feb/2009) & Time (16:19)

## EQUIPMENT LIST FOR AREAS SHOWN

| Pole | | | | Luminaires | | | | |
|---|---|---|---|---|---|---|---|---|
| QTY | LOCATION | SIZE | GRADE ELEVATION | MOUNTING HEIGHT | LAMP TYPE | QTY/ POLE | THIS GRID | OTHER GRIDS |
| 2 | A6-A7 | 60' | - | 60' | 1500W MZ | 4/4* | 1 | 7 |
| 2 | ← TOTALS → | | | | | 16 | 2 | 14 |

* This structure utilizes a back-to-back mounting configuration

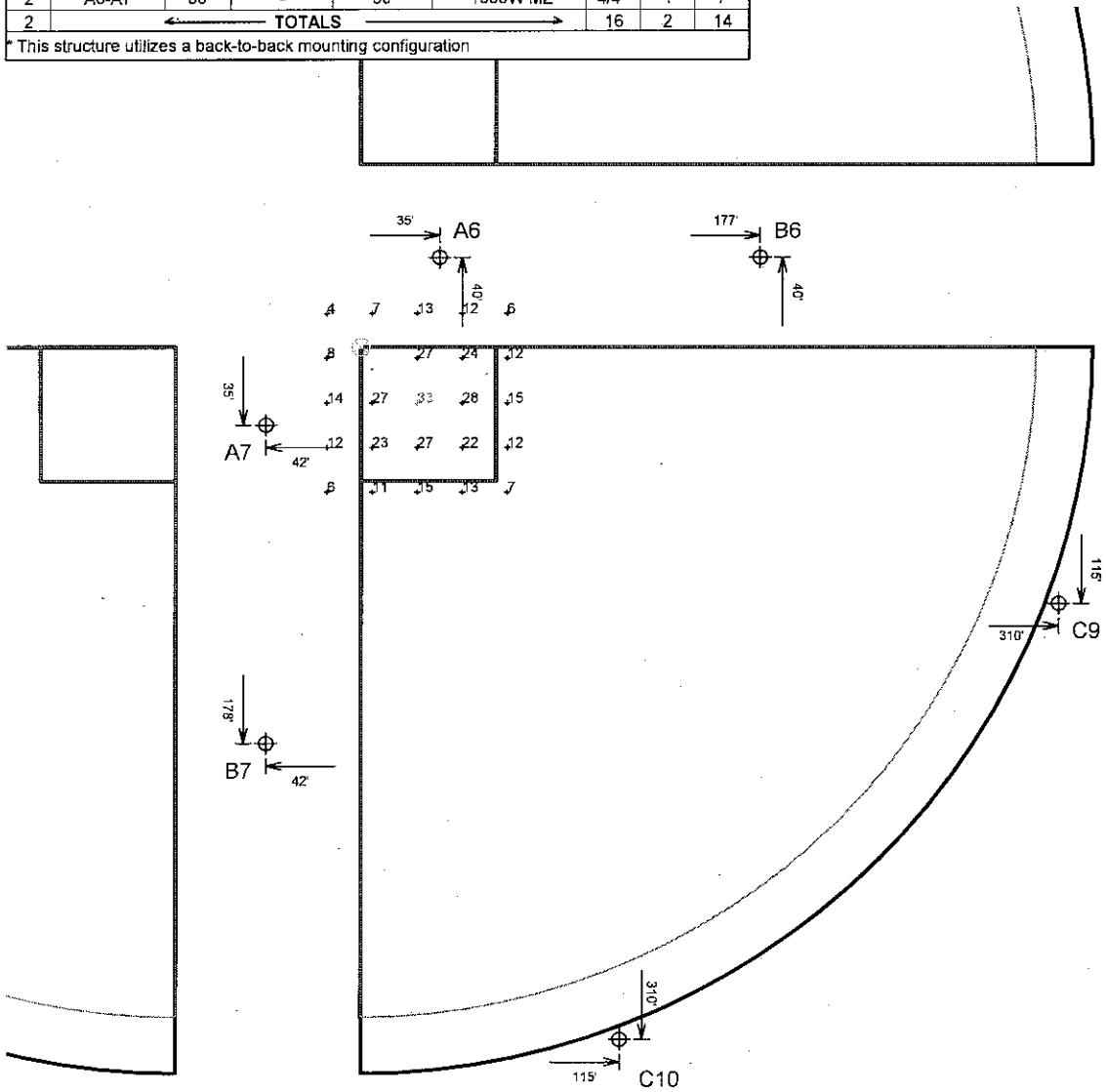


SCALE IN FEET 1 : 80

0' 80' 160'

Pole location(s) ⊕ dimensions are relative to 0,0 reference point(s) ⊗

**GUARANTEED PERFORMANCE**

## ILLUMINATION SUMMARY

**Softball 5**
Tucson Sports Complex
Tucson, AZ

**Softball 5 Maintenance**
- Size: 325'/325'/325' - 60' Basepath
- Grid Spacing = 20.0' x 20.0'
- Values given at 3.0' above grade

| | |
|---|---|
| · Luminaire Type: | Green Generation |
| · Rated Lamp Life: | 5000 hours |
| · Avg Lumens/Lamp: | 134,000 |

**CONSTANT ILLUMINATION HORIZONTAL FOOTCANDLES**

| | Entire Grid |
|---|---|
| No. of Target Points: | 24 |
| Average: | 15.8 |
| Maximum: | 33 |
| Minimum: | 4 |
| Avg/Min: | 3.85 |
| Max/Min: | 7.93 |
| UG (Adjacent Pts): | 2.05 |
| CV: | 0.52 |

| | |
|---|---|
| Average Lamp Tilt Factor: | 1.000 |
| Number of Luminaires: | 2 |
| Avg KW over 5000 hours: | 3.13 |
| Max KW: | 3.4 |

**Guaranteed Performance:** The CONSTANT ILLUMINATION described above is guaranteed for the rated life of the lamp.

**Field Measurements:** Averages shall be +/-10% in accordance with IESNA RP-6-01 and CIBSE LG4. Individual measurements may vary from computer predictions.

**Electrical System Requirements:** Refer to Amperage Draw Chart and/or the **"Musco Control System Summary"** for electrical sizing.

**Installation Requirements:** Results assume +/- 3% nominal voltage at line side of the ballast and structures located within 3 feet (1m) of design locations.

By: Matt Pearson

File #: 130819Prod Date: 05-Feb-09

Not to be reproduced in whole or part without the written consent of Musco Lighting. ©1981, 2009 Musco Lighting

Print Date (05/Feb/2009) & Time (16:19)

## EQUIPMENT LIST FOR AREAS SHOWN

| Pole | | | | Luminaires | | | | |
|---|---|---|---|---|---|---|---|---|
| QTY | LOCATION | SIZE | GRADE ELEVATION | MOUNTING HEIGHT | LAMP TYPE | QTY / POLE | THIS GRID | OTHER GRIDS |
| 1 | A7 | 60' | - | 60' | 1500W MZ | 4/4* | 3 | 5 |
| 1 | A8 | 60' | - | 60' | 1500W MZ | 4 | 3 | 1 |
| 1 | B7 | 70' | - | 70' | 1500W MZ | 8/8* | 8 | 8 |
| 1 | B8 | 70' | - | 70' | 1500W MZ | 8 | 8 | 0 |
| 2 | C11-C12 | 70' | - | 70' | 1500W MZ | 6 | 6 | 0 |
| 6 | ← TOTALS → | | | | | 48 | 34 | 14 |

* This structure utilizes a back-to-back mounting configuration

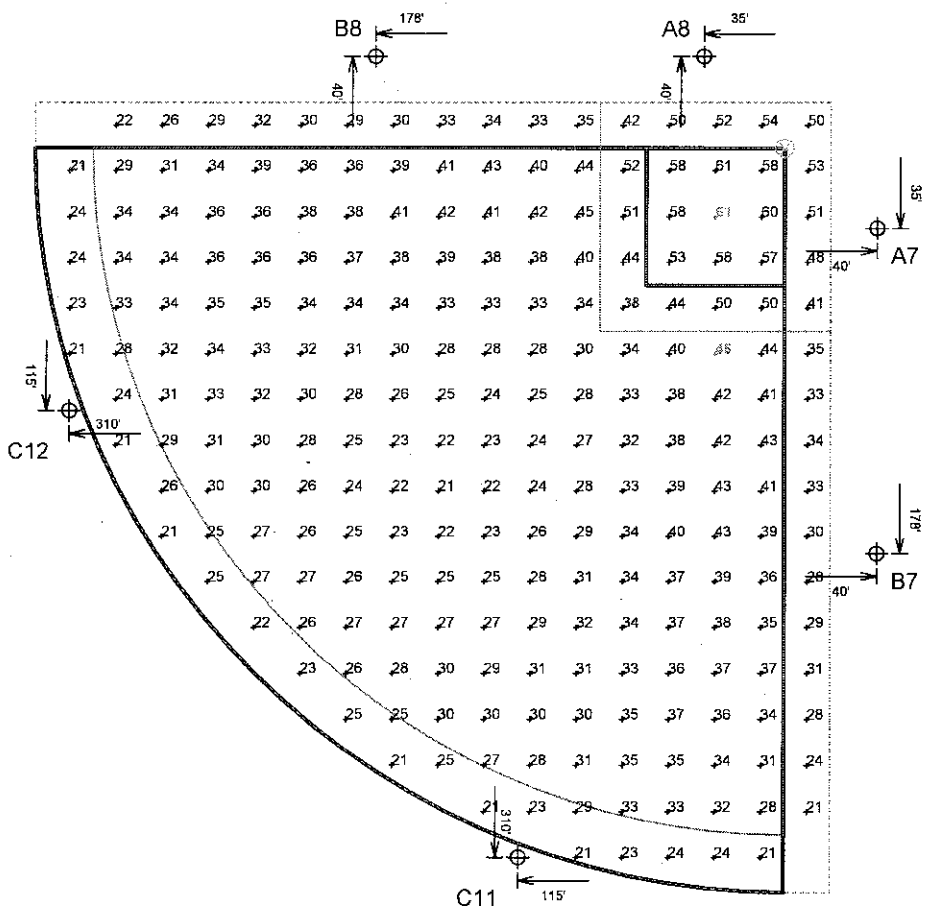


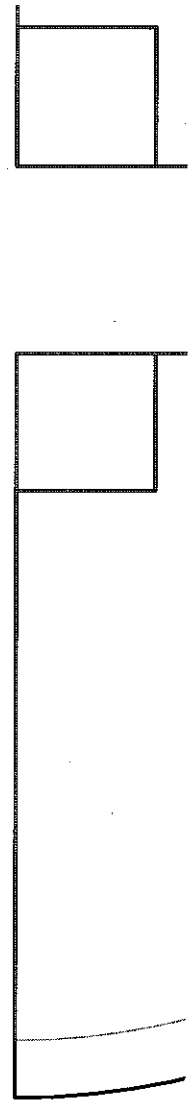

musco
GREEN GENERATION LIGHTING™

GUARANTEED PERFORMANCE

## ILLUMINATION SUMMARY

**Softball 6**
Tucson Sports Complex
Tucson, AZ

**Softball 6**
- Size: 325'/325'/325' - 60' Basepath
- Grid Spacing = 20.0' x 20.0'
- Values given at 3.0' above grade

- Luminaire Type: Green Generation
- Rated Lamp Life: 5000 hours
- Avg Lumens/Lamp: 134,000

**CONSTANT ILLUMINATION HORIZONTAL FOOTCANDLES**

| | Infield | Outfield |
|---|---|---|
| No. of Target Points: | 25 | 211 |
| Average: | 51.9 | 31.2 |
| Maximum: | 61 | 45 |
| Minimum: | 38 | 21 |
| Avg/Min: | 1.38 | 1.52 |
| Max/Min: | 1.63 | 2.21 |
| UG (Adjacent Pts): | 1.23 | 1.42 |
| CV: | 0.12 | 0.19 |

| | |
|---|---|
| Average Lamp Tilt Factor: | 1.000 |
| Number of Luminaires: | 34 |
| Avg KW over 5000 hours: | 53.18 |
| Max KW: | 57.8 |

**Guaranteed Performance:** The CONSTANT ILLUMINATION described above is guaranteed for the rated life of the lamp.

**Field Measurements:** Averages shall be +/-10% in accordance with IESNA RP-6-01 and CIBSE LG4. Individual measurements may vary from computer predictions.

**Electrical System Requirements:** Refer to Amperage Draw Chart and/or the **"Musco Control System Summary"** for electrical sizing.

**Installation Requirements:** Results assume +/- 3% nominal voltage at line side of the ballast and structures located within 3 feet (1m) of design locations.

By: Matt Pearson

File #: 130819Prod Date: 05-Feb-09

SCALE IN FEET 1 : 80

0' 80' 160'

Pole location(s) ⊕ dimensions are relative to 0,0 reference point(s) ⊗

Not to be reproduced in whole or part without the written consent of Musco Lighting. ©1981, 2009 Musco Lighting

Print Date (05/Feb/2009) & Time (16:19)

## EQUIPMENT LIST FOR AREAS SHOWN

| Pole | | | | Luminaires | | | | |
|---|---|---|---|---|---|---|---|---|
| QTY | LOCATION | SIZE | GRADE ELEVATION | MOUNTING HEIGHT | LAMP TYPE | QTY / POLE | THIS GRID | OTHER GRIDS |
| 1 | A7 | 60' | - | 60' | 1500W MZ | 4/4* | 1 | 7 |
| 1 | A8 | 60' | - | 60' | 1500W MZ | 4 | 1 | 3 |
| 2 | ← TOTALS → | | | | | 12 | 2 | 10 |

* This structure utilizes a back-to-back mounting configuration

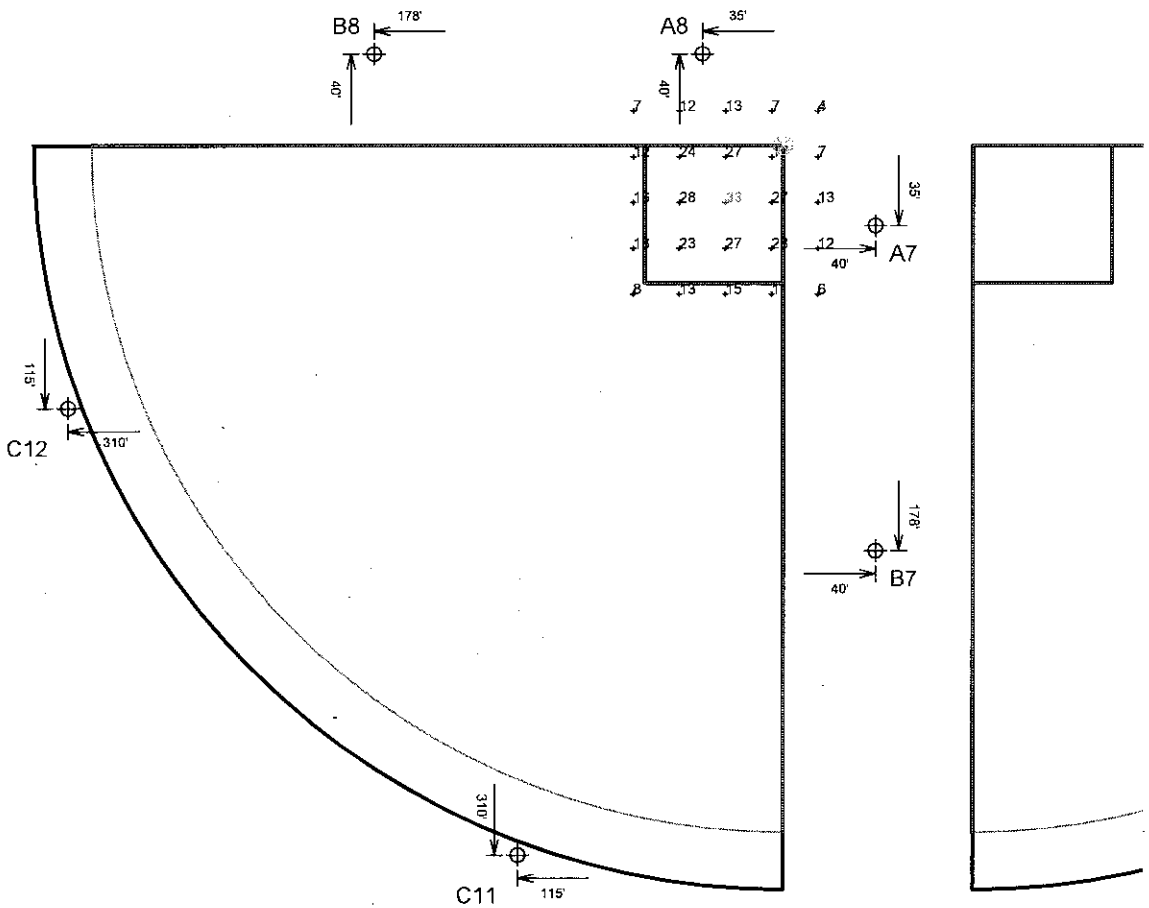


SCALE IN FEET 1 : 80

0' 80' 160'

Pole location(s) ⊕ dimensions are relative to 0,0 reference point(s) ⊗

musco GREEN GENERATION LIGHTING™

**GUARANTEED PERFORMANCE**

## ILLUMINATION SUMMARY

**Softball 6**
Tucson Sports Complex
Tucson, AZ

**Softball 6 Maintenance**
- Size: 325'/325'/325' - 60' Basepath
- Grid Spacing = 20.0' x 20.0'
- Values given at 3.0' above grade

| | |
|---|---|
| · Luminaire Type: | Green Generation |
| · Rated Lamp Life: | 5000 hours |
| · Avg Lumens/Lamp: | 134,000 |

**CONSTANT ILLUMINATION HORIZONTAL FOOTCANDLES**

| | Entire Grid |
|---|---|
| No. of Target Points: | 25 |
| Average: | 15.9 |
| Maximum: | 33 |
| Minimum: | 4 |
| Avg/Min: | 4.08 |
| Max/Min: | 8.40 |
| UG (Adjacent Pts): | 2.33 |
| CV: | 0.52 |

| | |
|---|---|
| Average Lamp Tilt Factor: | 1.000 |
| Number of Luminaires: | 2 |
| Avg KW over 5000 hours: | 3.13 |
| Max KW: | 3.4 |

**Guaranteed Performance:** The CONSTANT ILLUMINATION described above is guaranteed for the rated life of the lamp.

**Field Measurements:** Averages shall be +/-10% in accordance with IESNA RP-6-01 and CIBSE LG4. Individual measurements may vary from computer predictions.

**Electrical System Requirements:** Refer to Amperage Draw Chart and/or the **"Musco Control System Summary"** for electrical sizing.

**Installation Requirements:** Results assume +/- 3% nominal voltage at line side of the ballast and structures located within 3 feet (1m) of design locations.

By: Matt Pearson

File #: 130819Prod Date: 05-Feb-09

Not to be reproduced in whole or part without the written consent of Musco Lighting. ©1981, 2009 Musco Lighting

Print Date (05/Feb/2009) & Time (16:19)

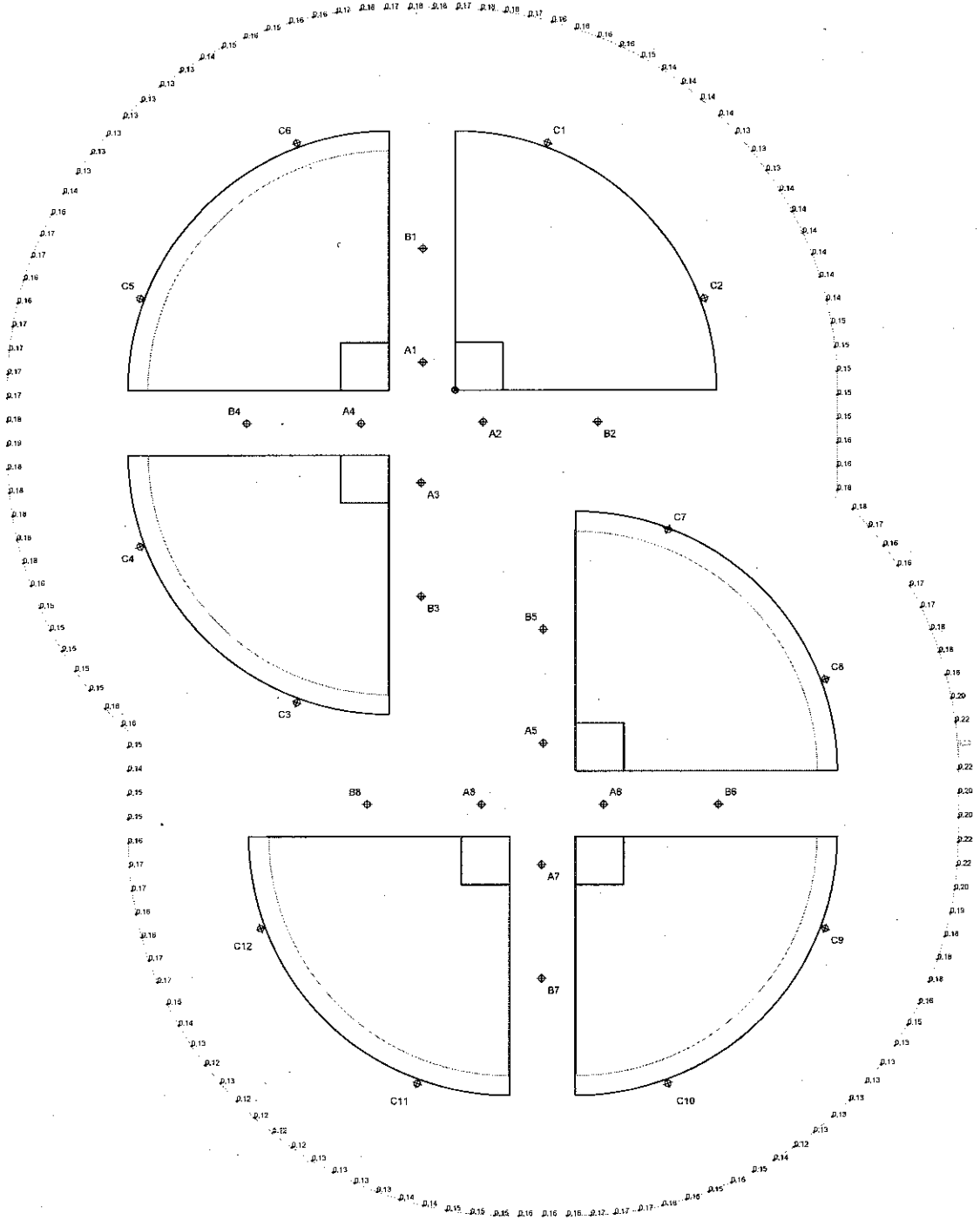


musco
GREEN GENERATION LIGHTING™

GUARANTEED PERFORMANCE

## ILLUMINATION SUMMARY

**150' Spill**
Tucson Sports Complex
Tucson, AZ

**150' Spill**
- Grid Spacing = 30.0'
- Values given at 6.0' above grade

| | |
|---|---|
| · Luminaire Type: | Green Generation |
| · Rated Lamp Life: | 5000 hours |
| · Avg Lumens/Lamp: | 134,000 |

**CONSTANT ILLUMINATION HORIZONTAL FOOTCANDLES**

| | Entire Grid |
|---|---|
| No. of Target Points: | 145 |
| Average: | 0.158 |
| Maximum: | 0.23 |
| Minimum: | 0.12 |

| | |
|---|---|
| Average Lamp Tilt Factor: | 1.000 |
| Number of Luminaires: | 216 |
| Avg KW over 5000 hours: | 357.02 |
| Max KW: | 367.2 |

**Guaranteed Performance:** The CONSTANT ILLUMINATION described above is guaranteed for the rated life of the lamp.

**Field Measurements:** Averages shall be +/-10% in accordance with IESNA RP-6-01 and CIBSE LG4. Individual measurements may vary from computer predictions.

**Electrical System Requirements:** Refer to Amperage Draw Chart and/or the "Musco Control System Summary" for electrical sizing.

**Installation Requirements:** Results assume +/- 3% nominal voltage at line side of the ballast and structures located within 3 feet (1m) of design locations.

SCALE IN FEET 1 : 100
0' 100' 200'

Pole location(s) ⊕ dimensions are relative to 0,0 reference point(s) ⊗

By: Matt Pearson
File #: 130819Prod Date: 05-Feb-09

Not to be reproduced in whole or part without the written consent of Musco Lighting. ©1981, 2009 Musco Lighting

Print Date (05/Feb/2009) & Time (16:26)

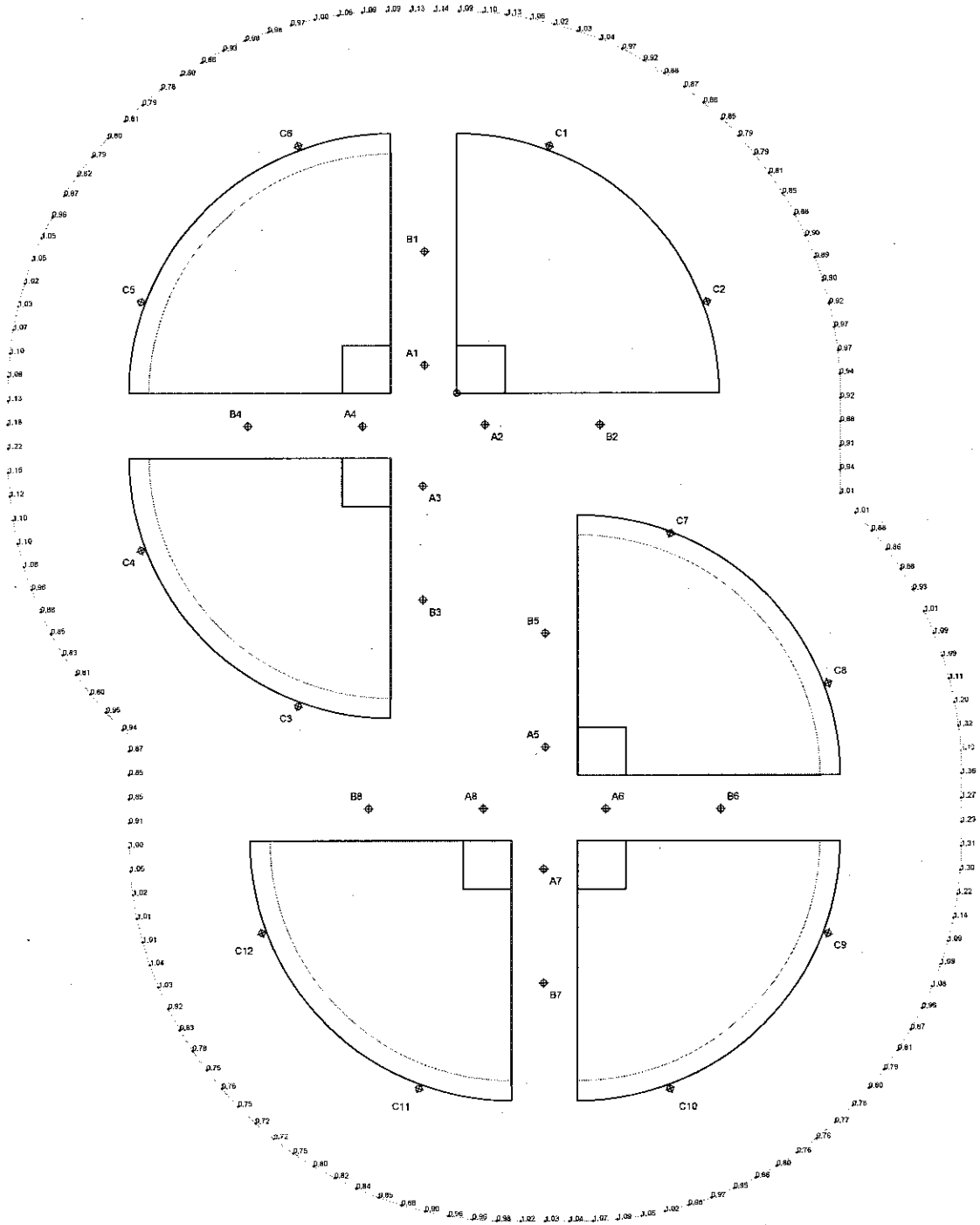


musco
GREEN GENERATION LIGHTING

GUARANTEED PERFORMANCE

## ILLUMINATION SUMMARY

**150' Spill**
Tucson Sports Complex
Tucson, AZ

**150' Spill**
- Grid Spacing = 30.0'
- Values given at 6.0' above grade

| | |
|---|---|
| - Luminaire Type: | Green Generation |
| - Rated Lamp Life: | 5000 hours |
| - Avg Lumens/Lamp: | 134,000 |

**CONSTANT ILLUMINATION**
**MAX VERTICAL FOOTCANDLES**

| | Entire Grid |
|---|---|
| No. of Target Points: | 145 |
| Average: | 0.965 |
| Maximum: | 1.40 |
| Minimum: | 0.72 |

| | |
|---|---|
| Average Lamp Tilt Factor: | 1.000 |
| Number of Luminaires: | 216 |
| Avg KW over 5000 hours: | 337.82 |
| Max KW: | 367.2 |

**Guaranteed Performance:** The CONSTANT ILLUMINATION described above is guaranteed for the rated life of the lamp.

**Field Measurements:** Averages shall be +/-10% in accordance with IESNA RP-8-01 and CIBSE LG4. Individual measurements may vary from computer predictions.

**Electrical System Requirements:** Refer to Amperage Draw Chart and/or the "Musco Control System Summary" for electrical sizing.

**Installation Requirements:** Results assume +/- 3% nominal voltage at line side of the ballast and structures located within 3 feet (1m) of design locations.

SCALE IN FEET 1 : 100
0 100' 200

Pole location(s) ⊕ dimensions are relative to 0,0 reference point(s) ⊗

By: Matt Pearson
File #: 130815Prod Date: 05-Feb-09

Not to be reproduced in whole or part without the written consent of Musco Lighting. ©1981, 2009 Musco Lighting

Print Date (05/Feb/2009) & Time (16:26)

NOTES: See scans for pole dimensions.

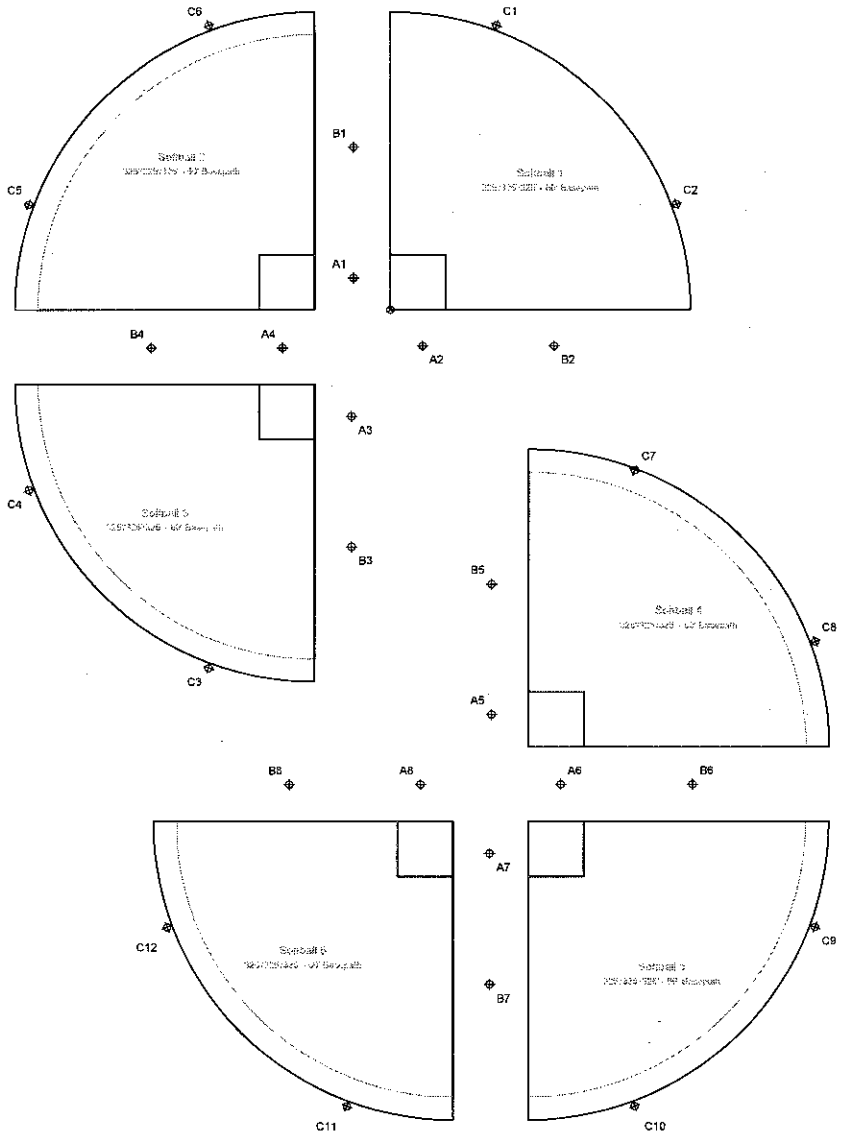


SCALE IN FEET 1 : 100

0 100' 200

musco
GREEN GENERATION LIGHTING™

GUARANTEED PERFORMANCE

## EQUIPMENT LAYOUT

**Tucson Sports Complex**
Tucson, AZ

**INCLUDES:**
- Softball 1
- Softball 2
- Softball 3
- Softball 4
- Softball 5
- Softball 6

**Electrical System Requirements:** Refer to Amperage Draw Chart and/or the "Musco Control System Summary" for electrical sizing.

**Installation Requirements:** Results assume +/- 3% nominal voltage at line side of the ballast and structures located within 3 feet (1m) of design locations.

**EQUIPMENT LIST FOR AREAS SHOWN**

| Pole | | | | Luminaires | | |
|---|---|---|---|---|---|---|
| QTY | LOCATION | SIZE | GROUND ELEVATION | MOUNTING HEIGHT | LAMP TYPE | QTY / POLE |
| 4 | A1, A4 A5-A7 | 90' | - | 90' | 1500W MZ | 4/4* |
| 4 | A2-A3, A8 | 90' | - | 90' | 1500W MZ | 4 |
| 4 | B1, B4 B6-B7 | 70' | - | 70' | 1500W MZ | 8/8* |
| 4 | B2-B3, B5 B8 | 70' | - | 70' | 1500W MZ | 8 |
| 12 | C1 C2-C9 C10-C12 | 70' | - | 70' | 1500W MZ | 8 |
| 28 | ←TOTALS→ | | | | | 216 |

* This structure utilizes a back-to-back mounting configuration

**SINGLE LUMINAIRE AMPERAGE DRAW CHART**

| Ballast Specifications (.90 min power factor) | Line Amperage Per Luminaire (max. or min) | | | | | | | | |
|---|---|---|---|---|---|---|---|---|---|
| Single Phase Voltage | 120 (MIN) | 208 (MIN) | 220 (MIN) | 240 (MIN) | 277 (MIN) | 347 (MIN) | 380 (MIN) | 415 (MIN) | 480 (MIN) |
| 1500 watt MZ | 15.0 | 8.9 | 7.7 | 7.5 | 6.5 | 5.1 | 4.7 | - | 3.7 |

By: Matt Pearson

File #: 130819Prod Date: 05-Feb-09

Pole location(s) ⊕ dimensions are relative to 0,0 reference point(s) ⊗

Not to be reproduced in whole or part without the written consent of Musco Lighting. ©1981, 2009 Musco Lighting

Print Date (05/Feb/2009) & Time (15:26)

# Pima County Sports Park LED Relight

Tucson, AZ

## Lighting System

**Pole / Fixture Summary**

| Pole ID | Pole Height | Mtg Height | Fixture Qty | Luminaire Type | Load | Circuit |
|---|---|---|---|---|---|---|
| A1-A2 | 60' | 60' | 2 | TLC-LED-1500 | 2.86 kW | A |
| B1-B2 | 70' | 70' | 6 | TLC-LED-1500 | 8.58 kW | A |
| | | 16' | 1 | TLC-BT-575 | 0.58 kW | A |
| C1-C2 | 60' | 60' | 4 | TLC-LED-1500 | 5.72 kW | A |
| | | 16' | 2 | TLC-BT-575 | 1.15 kW | A |
| *6* | | | *30* | | *37.77 kW* | |

**Circuit Summary**

| Circuit | Description | Load | Fixture Qty |
|---|---|---|---|
| A | Softball | 37.77 kW | 30 |

**Fixture Type Summary**

| Type | Source | Wattage | Lumens | L90 | L80 | L70 | Quantity |
|---|---|---|---|---|---|---|---|
| TLC-LED-1500 | LED 5700K - 75 CRI | 1430W | 160,000 | >81,000 | >81,000 | >81,000 | 24 |
| TLC-BT-575 | LED 5700K - 75 CRI | 575W | 52,000 | >81,000 | >81,000 | >81,000 | 6 |

## Light Level Summary

**Calculation Grid Summary**

| Grid Name | Calculation Metric | Illumination | | | | | Circuits | Fixture Qty |
|---|---|---|---|---|---|---|---|---|
| | | Ave | Min | Max | Max/Min | Ave/Min | | |
| Softball Spill | Horizontal Illuminance | 0.01 | 0 | 0.04 | 49.63 | | A | 30 |
| Softball Spill | Max Candela Metric | 1618 | 198 | 4171 | 21.08 | 8.18 | A | 30 |
| Softball Spill | Max Vertical Illuminance Metric | 0.04 | 0 | 0.10 | 21.20 | | A | 30 |
| Softball (Infield) | Horizontal Illuminance | 52.2 | 40 | 74 | 1.86 | 1.31 | A | 30 |
| Softball (Outfield) | Horizontal Illuminance | 30.7 | 19 | 46 | 2.44 | 1.62 | A | 30 |

# Pima County Sports Park

Tucson, Arizona

## From Hometown to Professional

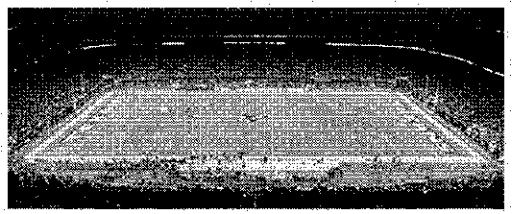

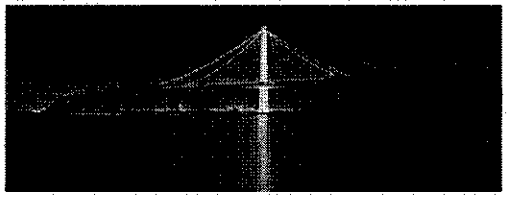

We Make It Happen.

Not to be reproduced in whole or part without the written consent of Musco Sports Lighting, LLC. ©1981, 2019 Musco Sports Lighting, LLC.

# Pima County Sports Park

Tucson, Arizona

## EQUIPMENT LIST FOR AREAS SHOWN

| Pole | | | | Luminaires | | | | |
|---|---|---|---|---|---|---|---|---|
| QTY | LOCATION | SIZE | GRADE ELEVATION | MOUNTING HEIGHT | LUMINAIRE TYPE | QTY / POLE | THIS GRID | OTHER GRIDS |
| 2 | A1-A2 | 60' | - | 60' | TLC-LED-1500 | 2 | 2 | 0 |
| 2 | B1-B2 | 70' | - | 15.5' | TLC-BT-575 | 1 | 1 | 0 |
| | | | | 70' | TLC-LED-1500 | 6 | 6 | 0 |
| 2 | C1-C2 | 60' | - | 15.5' | TLC-BT-575 | 2 | 2 | 0 |
| | | | | 60' | TLC-LED-1500 | 4 | 4 | 0 |
| 6 | TOTALS | | | | | 30 | 30 | 0 |

## GRID SUMMARY

| | |
|---|---|
| **Name:** | **Softball** |
| Size: | 325'/325'/325' - basepath 60' |
| Spacing: | 20.0' x 20.0' |
| Height: | 3.0' above grade |

## ILLUMINATION SUMMARY

MAINTAINED HORIZONTAL FOOTCANDLES

| | Infield | Outfield |
|---|---|---|
| **Guaranteed Average:** | **50** | **30** |
| Scan Average: | 52.23 | 30.74 |
| Maximum: | 74 | 46 |
| Minimum: | 40 | 19 |
| Avg / Min: | 1.31 | 1.61 |
| **Guaranteed Max / Min:** | **2** | **2.5** |
| Max / Min: | 1.86 | 2.44 |
| UG (adjacent pts): | 1.47 | 1.78 |
| CU: | 0.77 | |
| No. of Points: | 25 | 211 |

LUMINAIRE INFORMATION

| | |
|---|---|
| Color / CRI: | 5700K - 75 CRI |
| Luminaire Output: | 160,000 / 52,000 lumens |
| **No. of Luminaires:** | **30** |
| Total Load: | 37.77 kW |

Lumen Maintenance

| Luminaire Type | L90 hrs | L80 hrs | L70 hrs |
|---|---|---|---|
| TLC-LED-1500 | >81,000 | >81,000 | >81,000 |
| TLC-BT-575 | >81,000 | >81,000 | >81,000 |

Reported per TM-21-11. See luminaire datasheet for details.

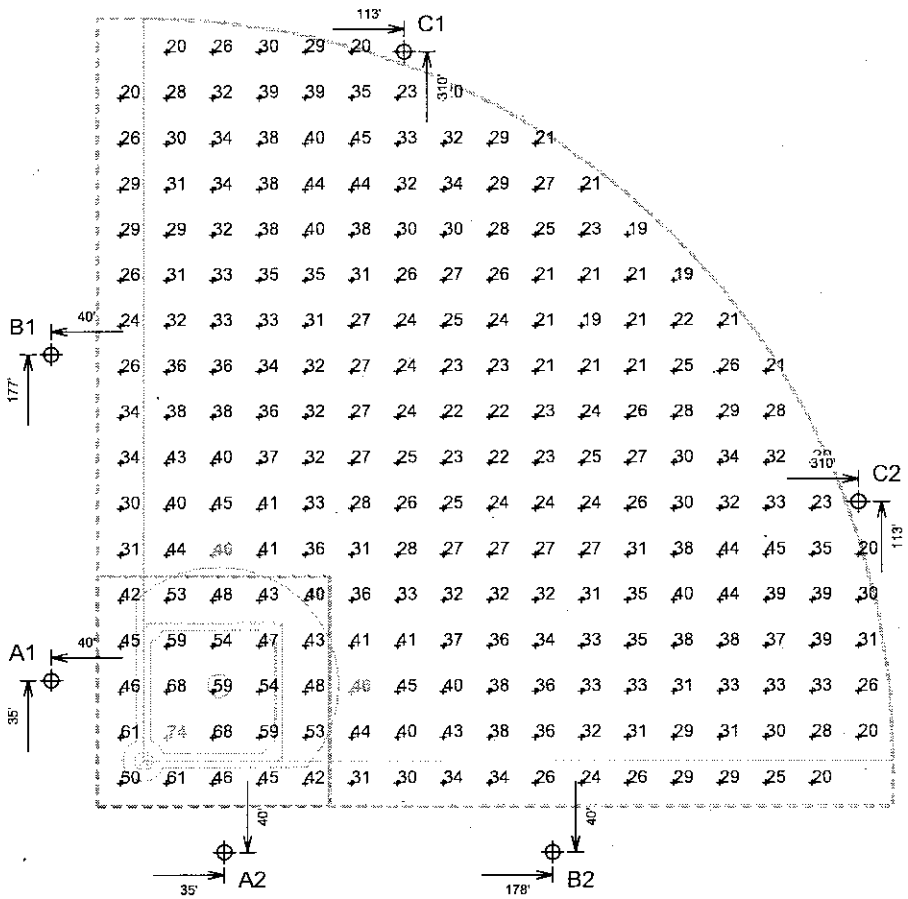


SCALE IN FEET 1 : 80

0' 80' 160'

Pole location(s) ⊕ dimensions are relative to 0,0 reference point(s) ⊗

**Guaranteed Performance:** The ILLUMINATION described above is guaranteed per your Musco Warranty document and includes a 0.95 dirt depreciation factor.

**Field Measurements:** Individual field measurements may vary from computer-calculated predictions and should be taken in accordance with IESNA RP-6-15.

**Electrical System Requirements:** Refer to Amperage Draw Chart and/or the **"Musco Control System Summary"** for electrical sizing.

**Installation Requirements:** Results assume ± 3% nominal voltage at line side of the driver and structures located within 3 feet (1m) of design locations.

**We Make It Happen.**

Not to be reproduced in whole or part without the written consent of Musco Sports Lighting, LLC. ©1981, 2019 Musco Sports Lighting, LLC.

**ENGINEERED DESIGN** By: • File #SB53-323232-15-6P_C • 30-Jul-19

**ILLUMINATION SUMMARY**

## EQUIPMENT LIST FOR AREAS SHOWN

| Pole | | | | Luminaires | | | | |
|---|---|---|---|---|---|---|---|---|
| QTY | LOCATION | SIZE | GRADE ELEVATION | MOUNTING HEIGHT | LUMINAIRE TYPE | QTY / POLE | THIS GRID | OTHER GRIDS |
| 2 | A1-A2 | 60' | - | 60' | TLC-LED-1500 | 2 | 2 | 0 |
| 2 | B1-B2 | 70' | - | 15.5' | TLC-BT-575 | 1 | 1 | 0 |
| | | | | 70' | TLC-LED-1500 | 6 | 6 | 0 |
| 2 | C1-C2 | 60' | - | 15.5' | TLC-BT-575 | 2 | 2 | 0 |
| | | | | 60' | TLC-LED-1500 | 4 | 4 | 0 |
| 6 | TOTALS | | | | | 30 | 30 | 0 |

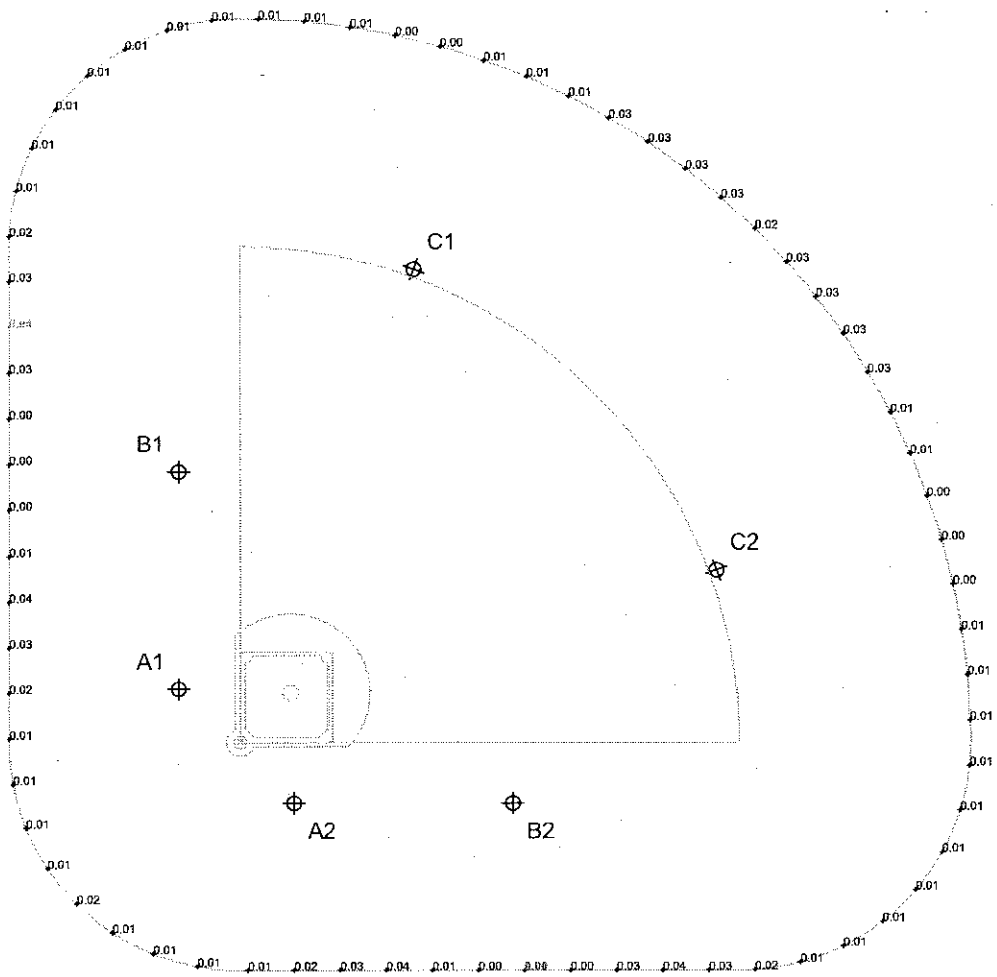


SCALE IN FEET 1 : 120

0' 120' 240'

Pole location(s) ⊕ dimensions are relative to 0,0 reference point(s) ⊗

**ENGINEERED DESIGN** By: • File #SB53-323232-15-6P_C • 30-Jul-19

# Pima County Sports Park

Tucson, Arizona

## GRID SUMMARY

| | |
|---|---|
| **Name:** | **Softball Spill** |
| Spacing: | 30.0' |
| Height: | 3.0' above grade |

## ILLUMINATION SUMMARY

HORIZONTAL FOOTCANDLES

| | Entire Grid |
|---|---|
| **Scan Average:** | **0.0141** |
| Maximum: | 0.04 |
| Minimum: | 0.00 |
| No. of Points: | 70 |

LUMINAIRE INFORMATION

| | |
|---|---|
| Color / CRI: | 5700K - 75 CRI |
| Luminaire Output: | 160,000 / 52,000 lumens |
| **No. of Luminaires:** | **30** |
| Total Load: | 37.77 kW |

Lumen Maintenance

| Luminaire Type | L90 hrs | L80 hrs | L70 hrs |
|---|---|---|---|
| TLC-LED-1500 | >81,000 | >81,000 | >81,000 |
| TLC-BT-575 | >81,000 | >81,000 | >81,000 |

Reported per TM-21-11. See luminaire datasheet for details.

**Guaranteed Performance:** The ILLUMINATION described above is guaranteed per your Musco Warranty document.

**Field Measurements:** Individual field measurements may vary from computer-calculated predictions and should be taken in accordance with IESNA RP-6-15.

**Electrical System Requirements:** Refer to Amperage Draw Chart and/or the "**Musco Control System Summary**" for electrical sizing.

**Installation Requirements:** Results assume ± 3% nominal voltage at line side of the driver and structures located within 3 feet (1m) of design locations.

**We Make It Happen.**

Not to be reproduced in whole or part without the written consent of Musco Sports Lighting, LLC. ©1981, 2019 Musco Sports Lighting, LLC.

**ILLUMINATION SUMMARY**

# Pima County Sports Park

Tucson, Arizona

## EQUIPMENT LIST FOR AREAS SHOWN

| Pole | | | | Luminaires | | | | |
|---|---|---|---|---|---|---|---|---|
| QTY | LOCATION | SIZE | GRADE ELEVATION | MOUNTING HEIGHT | LUMINAIRE TYPE | QTY / POLE | THIS GRID | OTHER GRIDS |
| 2 | A1-A2 | 60' | - | 60' | TLC-LED-1500 | 2 | 2 | 0 |
| 2 | B1-B2 | 70' | - | 15.5' | TLC-BT-575 | 1 | 1 | 0 |
| | | | | 70' | TLC-LED-1500 | 6 | 6 | 0 |
| 2 | C1-C2 | 60' | - | 15.5' | TLC-BT-575 | 2 | 2 | 0 |
| | | | | 60' | TLC-LED-1500 | 4 | 4 | 0 |
| 6 | TOTALS | | | | | 30 | 30 | 0 |

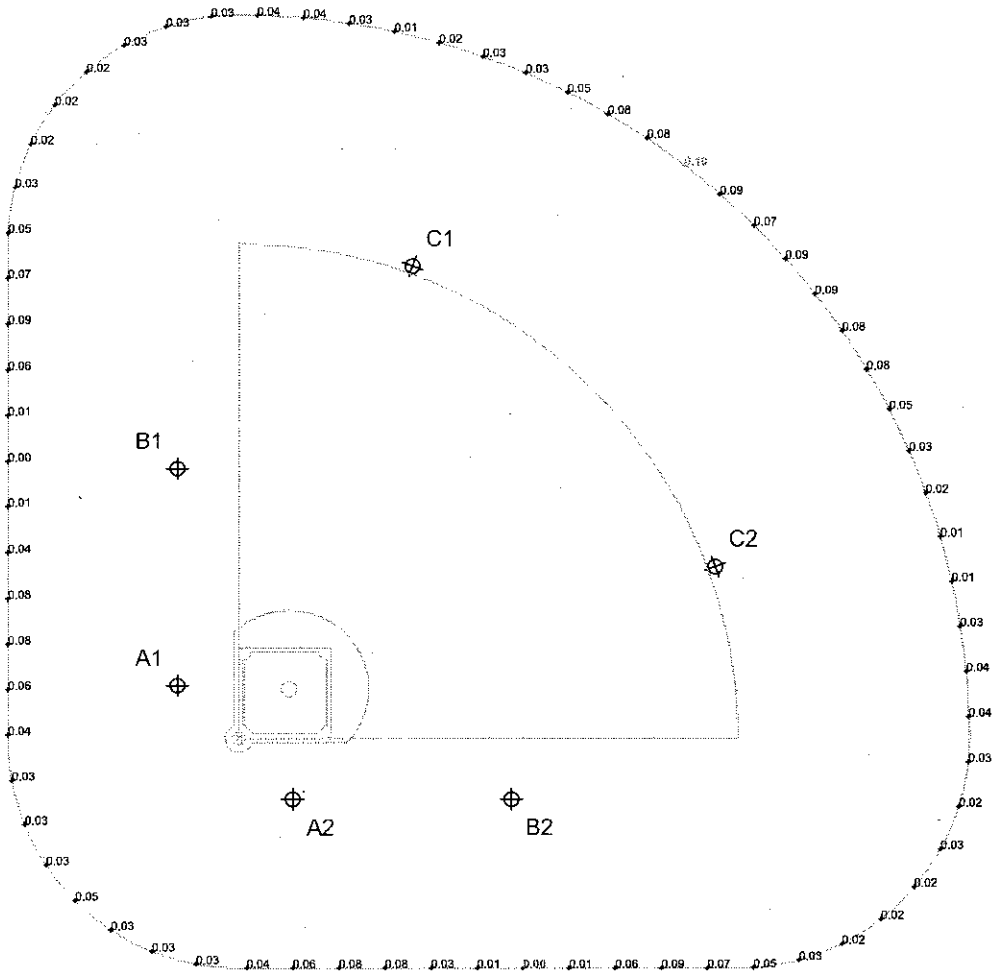


SCALE IN FEET 1 : 120

0' 120' 240'

Pole location(s) ⊕ dimensions are relative to 0,0 reference point(s) ⊗

## GRID SUMMARY

| | |
|---|---|
| **Name:** | **Softball Spill** |
| Spacing: | 30.0' |
| Height: | 3.0' above grade |

## ILLUMINATION SUMMARY

MAX VERTICAL FOOTCANDLES

| | Entire Grid |
|---|---|
| **Scan Average:** | **0.0422** |
| **Maximum:** | **0.10** |
| **Minimum:** | 0.00 |
| **No. of Points:** | 70 |

LUMINAIRE INFORMATION

| | |
|---|---|
| Color / CRI: | 5700K - 75 CRI |
| Luminaire Output: | 160,000 / 52,000 lumens |
| **No. of Luminaires:** | **30** |
| Total Load: | 37.77 kW |

Lumen Maintenance

| Luminaire Type | L90 hrs | L80 hrs | L70 hrs |
|---|---|---|---|
| TLC-LED-1500 | >81,000 | >81,000 | >81,000 |
| TLC-BT-575 | >81,000 | >81,000 | >81,000 |

Reported per TM-21-11. See luminaire datasheet for details.

**Guaranteed Performance:** The ILLUMINATION described above is guaranteed per your Musco Warranty document.

**Field Measurements:** Individual field measurements may vary from computer-calculated predictions and should be taken in accordance with IESNA RP-6-15.

**Electrical System Requirements:** Refer to Amperage Draw Chart and/or the "**Musco Control System Summary**" for electrical sizing.

**Installation Requirements:** Results assume ± 3% nominal voltage at line side of the driver and structures located within 3 feet (1m) of design locations.

**We Make It Happen.**

Not to be reproduced in whole or part without the written consent of Musco Sports Lighting, LLC. ©1981, 2019 Musco Sports Lighting, LLC.

**ENGINEERED DESIGN** By: • File #SB53-323232-15-6P_C • 30-Jul-19

**ILLUMINATION SUMMARY**

# Pima County Sports Park

Tucson, Arizona

## EQUIPMENT LIST FOR AREAS SHOWN

| Pole | | | | Luminaires | | | | |
|---|---|---|---|---|---|---|---|---|
| QTY | LOCATION | SIZE | GRADE ELEVATION | MOUNTING HEIGHT | LUMINAIRE TYPE | QTY / POLE | THIS GRID | OTHER GRIDS |
| 2 | A1-A2 | 60' | - | 60' | TLC-LED-1500 | 2 | 2 | 0 |
| 2 | B1-B2 | 70' | - | 15.5' | TLC-BT-575 | 1 | 1 | 0 |
| | | | | 70' | TLC-LED-1500 | 6 | 6 | 0 |
| 2 | C1-C2 | 60' | - | 15.5' | TLC-BT-575 | 2 | 2 | 0 |
| | | | | 60' | TLC-LED-1500 | 4 | 4 | 0 |
| 6 | TOTALS | | | | | 30 | 30 | 0 |

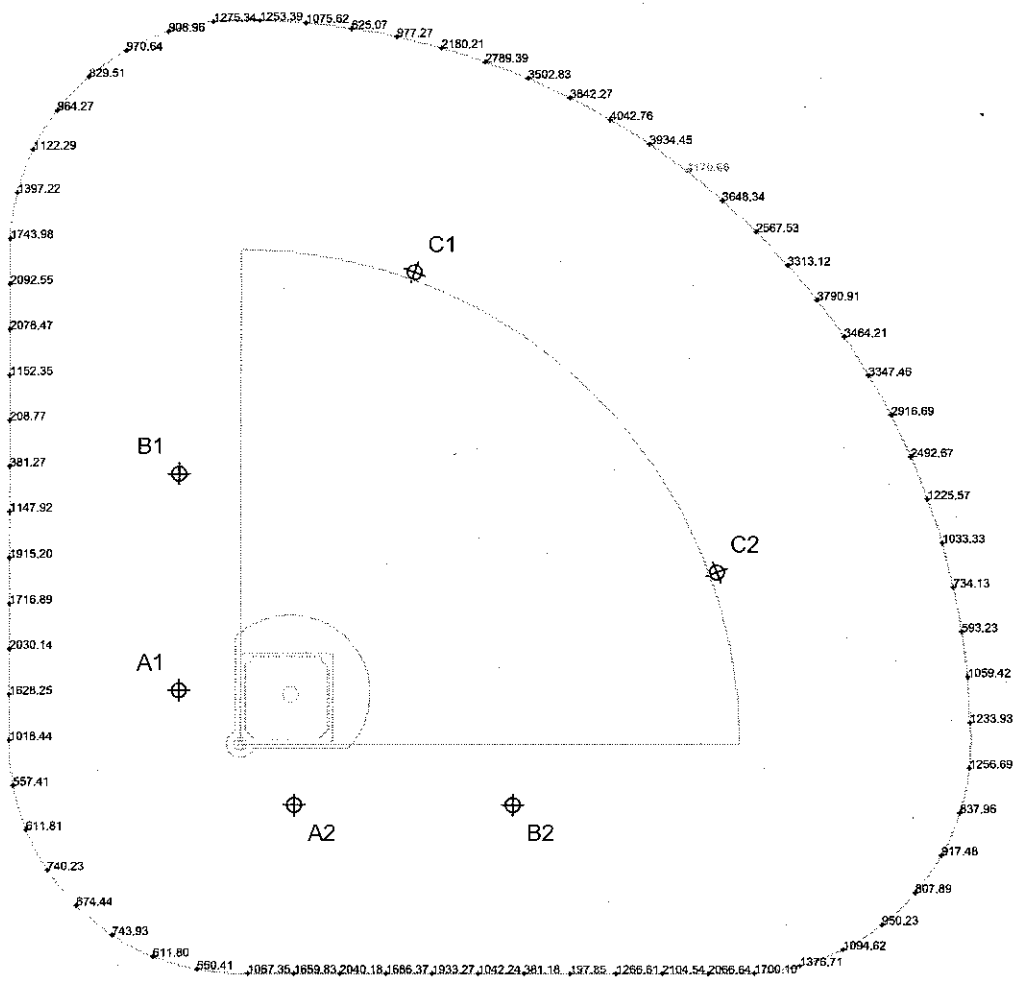


SCALE IN FEET 1 : 120

0' 120' 240'

Pole location(s) ⊕ dimensions are relative to 0,0 reference point(s) ⊗

## GRID SUMMARY

| | |
|---|---|
| **Name:** | **Softball Spill** |
| Spacing: | 30.0' |
| Height: | 3.0' above grade |

## ILLUMINATION SUMMARY

CANDELA (PER FIXTURE)

| | Entire Grid |
|---|---|
| **Scan Average:** | **1618.2100** |
| **Maximum:** | **4170.66** |
| Minimum: | 197.85 |
| No. of Points: | 70 |

LUMINAIRE INFORMATION

| | |
|---|---|
| Color / CRI: | 5700K - 75 CRI |
| Luminaire Output: | 160,000 / 52,000 lumens |
| **No. of Luminaires:** | **30** |
| Total Load: | 37.77 kW |

Lumen Maintenance

| Luminaire Type | L90 hrs | L80 hrs | L70 hrs |
|---|---|---|---|
| TLC-LED-1500 | >81,000 | >81,000 | >81,000 |
| TLC-BT-575 | >81,000 | >81,000 | >81,000 |

Reported per TM-21-11. See luminaire datasheet for details.

**Guaranteed Performance:** The ILLUMINATION described above is guaranteed per your Musco Warranty document.

**Field Measurements:** Individual field measurements may vary from computer-calculated predictions and should be taken in accordance with IESNA RP-6-15.

**Electrical System Requirements:** Refer to Amperage Draw Chart and/or the "**Musco Control System Summary**" for electrical sizing.

**Installation Requirements:** Results assume ± 3% nominal voltage at line side of the driver and structures located within 3 feet (1m) of design locations.

**We Make It Happen.**

Not to be reproduced in whole or part without the written consent of Musco Sports Lighting, LLC. ©1981, 2019 Musco Sports Lighting, LLC.

**ENGINEERED DESIGN** By: • File #SB53-323232-15-6P_C • 30-Jul-19

# Pima County Sports Park

Tucson, Arizona

## EQUIPMENT LAYOUT

**INCLUDES:**

- Softball

**Electrical System Requirements:** Refer to Amperage Draw Chart and/or the **"Musco Control System Summary"** for electrical sizing.

**Installation Requirements:** Results assume ± 3% nominal voltage at line side of the driver and structures located within 3 feet (1m) of design locations.

## EQUIPMENT LIST FOR AREAS SHOWN

| Pole | | | | Luminaires | | |
|---|---|---|---|---|---|---|
| QTY | LOCATION | SIZE | GRADE ELEVATION | MOUNTING HEIGHT | LUMINAIRE TYPE | QTY / POLE |
| 2 | A1-A2 | 60' | - | 60' | TLC-LED-1500 | 2 |
| 2 | B1-B2 | 70' | - | 15.5' | TLC-BT-575 | 1 |
| | | | | 70' | TLC-LED-1500 | 6 |
| 2 | C1-C2 | 60' | - | 15.5' | TLC-BT-575 | 2 |
| | | | | 60' | TLC-LED-1500 | 4 |
| 6 | TOTALS | | | | | 30 |

## SINGLE LUMINAIRE AMPERAGE DRAW CHART

| Ballast Specifications (.90 min power factor) | Line Amperage Per Luminaire (max draw) | | | | | | |
|---|---|---|---|---|---|---|---|
| Single Phase Voltage | 208 (0) | 220 (0) | 240 (0) | 277 (0) | 347 (0) | 380 (0) | 480 (0) |
| TLC-LED-1500 | 8.5 | 8.1 | 7.4 | 6.4 | 5.1 | 4.7 | 3.7 |
| TLC-BT-575 | 3.4 | 3.2 | 2.9 | 2.5 | 2.0 | 1.8 | 1.5 |

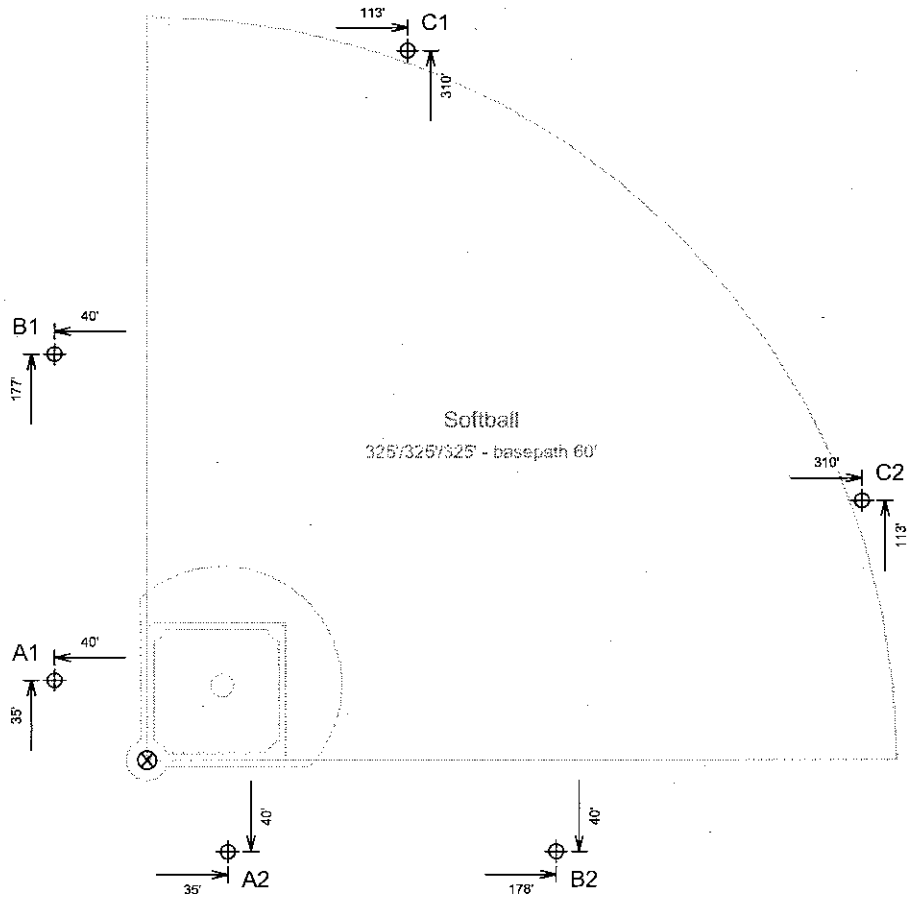


SCALE IN FEET 1 : 80

0' 80' 160'

Pole location(s) ⊕ dimensions are relative to 0,0 reference point(s) ⊗

**ENGINEERED DESIGN** By: • File #SB53-323232-15-6P_C • 30-Jul-19

We Make It Happen.

Not to be reproduced in whole or part without the written consent of Musco Sports Lighting, LLC. ©1981, 2019 Musco Sports Lighting, LLC.

## Retrofitting with Musco's TLC for LED™ Technology

When you walk onto a field that's been retrofitted with Musco's LED technology, it just looks better. There's a reason for that.

Our solutions are designed as a system—with lighting, electrical, and structural components engineered to work together. We'll conduct a structural assessment of your current lighting, and our retrofit solution will include a new wire harness and new, custom cross arms to ensure structural integrity and long-term reliability.

**Existing Light-Structure System™**

**Retrofit to TLC for LED™ Technology**

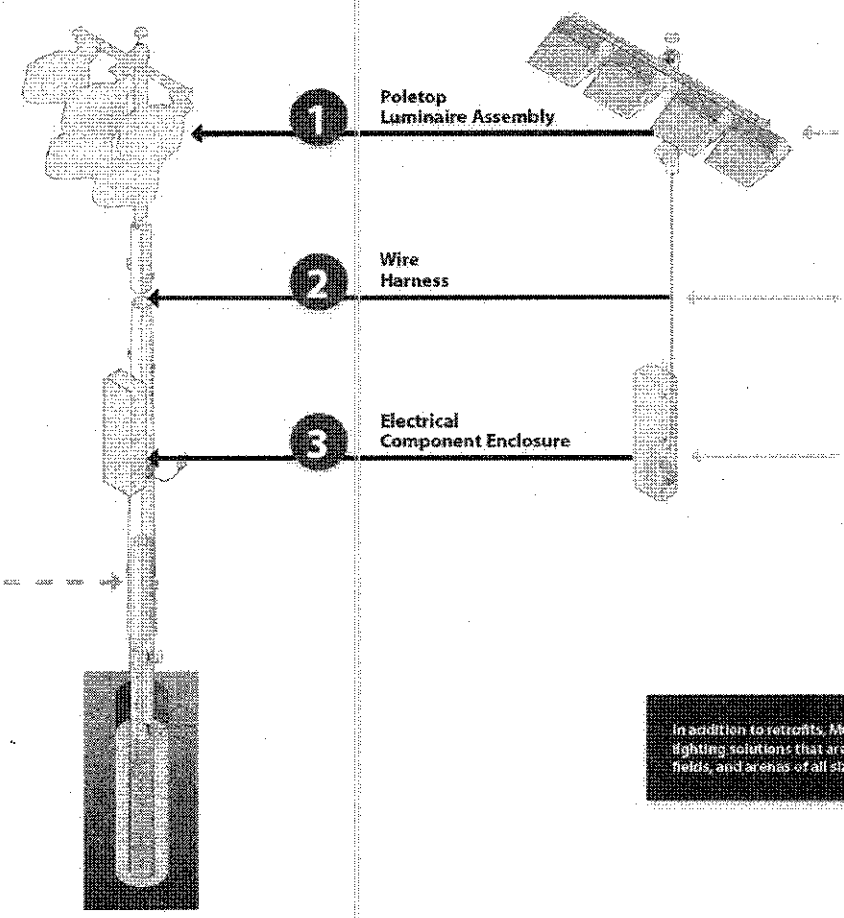

**1 Poletop Luminaire Assembly**

- Patented optics and glare control for better on-field lighting and precise control
- New cross arms to replace existing support structure
- Factory wired, aimed, and tested
- Single aiming point for fast, reliable installation

**2 Wire Harness**

- New factory-built wire harness
- Custom made per pole length and luminaire configuration
- Ensures no exposed wiring and solid connections with quick connect plug-ins

**3 Electrical Component Enclosure**

- Located remotely for easy access
- Houses major electrical components
- Factory wired and tested, with surge protection and fusing for sensitive electronic components

**Structural Analysis**

- To determine integrity of existing support structure

**In addition to retrofits, Musco also provides industry-leading sports lighting solutions that are complete and newly installed at stadiums, fields, and arenas of all sizes.**

**Diode Light Source—LED**

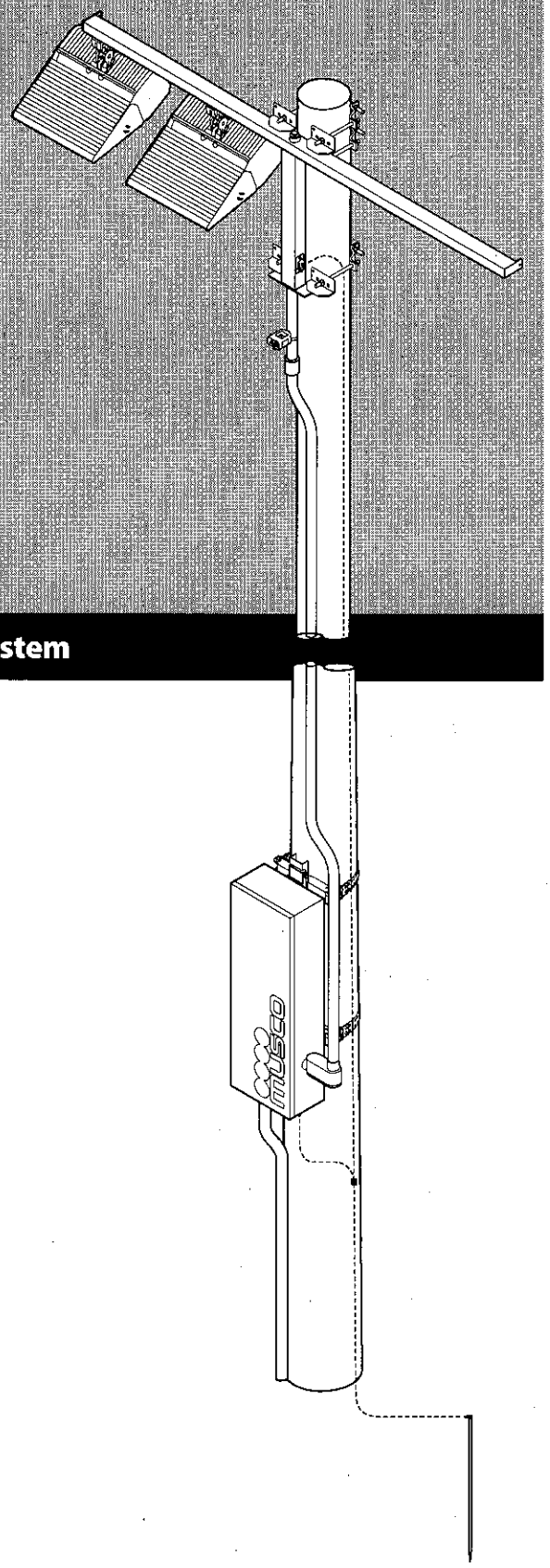


# Installation Instructions: **SportsCluster® Lighting System**

musco Lighting

**We Make It Happen.**

©2015, 2017 Musco Sports Lighting, LLC · LED ECE 9 · M-1933-en04-5

## Contents

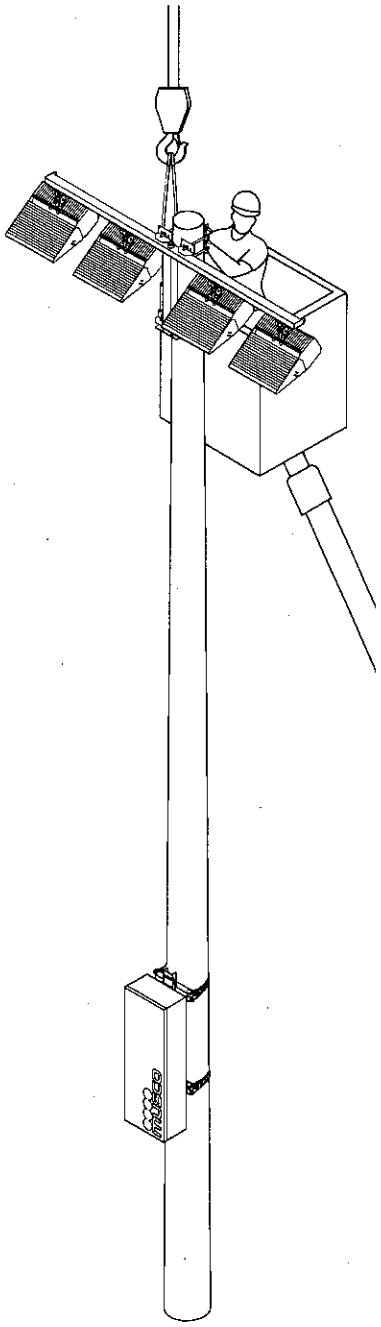

**Before You Begin** ..... **3**
Safety Information ..... 3
About These Instructions ..... 3
Standard Tools/Supplies ..... 4
Components of SportsCluster Lighting System ..... 4
Unloading Instructions ..... 5
Electrical System Requirements ..... 5
Documents We Provide ..... 6

**Electrical Components Enclosure** ..... **7**
Hardware Sorting ..... 7
Overview ..... 9
Installation Procedure ..... 9

**Poletop Luminaire Assembly** ..... **12**
Overview ..... 12
Assembly Procedure ..... 12

**Setting Poletop Luminaire Assembly** ..... **15**
Hardware Sorting and Preassembly ..... 15
Overview ..... 20
Installation Procedure ..... 20

**Wiring** ..... **24**
Overview ..... 24
Installation Procedure ..... 25

**Lightning Ground** ..... **30**
Overview ..... 30
Installation Procedure ..... 30

**Supplemental Instructions for Optional Features or Special Situations**
Provided with your project as needed

Auxiliary Bracket ..... D

©2015, 2017 Musco Sports Lighting, LLC · LED ECE 9 · M-1933-en04-5

# Before You Begin

## Safety Information

### Electrical Safety Guidelines

Use extreme caution near overhead power lines or underground utilities. Observe all safety precautions for high-voltage equipment. Only qualified personnel may perform wiring. Follow all applicable building and electrical codes.

### General Safety Guidelines

Follow proper safety procedures during installation. Installers must wear the appropriate personal protective equipment including:

- Hard hat
- Steel-toed shoes
- Fall protection
- Leather work gloves
- Eye protection

Locate all underground utilities prior to digging.

All tools and equipment supplied by Musco are designed for specific use as described in these instructions. Do not use them in any other manner. Do not alter structural members in any way, such as bend, weld, or drill, without prior authorization from Musco.

Luminaires generate up to 2.6 mA per driver on the equipment grounding conductor and are designed to meet leakage current requirements per IEC 61347-1.

The luminaires should be positioned so that prolonged staring into the luminaire at a distance closer than 12–37 m (40–121 ft) is not expected, per IEC/TR 62778. See table.

| Luminaire | Distance |
|---|---|
| TLC-LED-400 | 12 m (40 ft) |
| TLC-LED-600 | 20 m (65 ft) |
| TLC-LED-900 | no minimum |
| TLC-LED-1150 | 12 m (40 ft) |
| TLC-LED-1400 | 37 m (121 ft) |

## About These Instructions

These instructions outline basic assembly procedures for the SportsCluster lighting system. They are not a comprehensive guide to all possible situations. Direct any questions to +1-800-825-6020 or call your local Musco representative.

### Throughout this manual note these important symbols:

The safety alert symbol alerts you of situations that require care and caution to avoid serious personal injury.

The stop and check symbol signals you to stop and verify conditions before proceeding.

The contact Musco symbol appears in special situations where you may need to contact Musco for further information.

The go-to arrow indicates a branch in a procedure for special situations. In case of optional equipment, the instructions may be in another document.

The tip symbol points out advice that makes installation easier.

The recycle symbol identifies recyclable materials.

©2015, 2017 Musco Sports Lighting, LLC · LED ECE 9 · M-1933-en04-5

# Before You Begin

## Standard Tools/Supplies

| Contractor/installer supplies | Function | Page |
|---|---|---|
| Hammer, pry-bar, banding cutters | Unloading equipment | 5 |
| Measuring tape, 25 ft (7.5 m) | Identifying brackets and straps, locating components at proper height on pole | 7, 8, 9, 15 |
| Torque wrench | Torquing pole clamping hardware | 10 |
| Sockets: ½, 9/16 in standard and deepwell | Torquing pole clamping hardware | 10 |
| Screwdrivers, standard and Phillips | Landing power, tightening enclosure hub screws | 11, 29, 30 |
| Marker | Marking hanger bracket mounting locations on pole | 9 |
| Paint, chalk, flags | Marking aiming points on field | 20 |
| Measuring tape, 300 ft (90 m) | Locating aiming points on field | 20 |
| 15/16 in open-end torque wrench or torque wrench with 15/16 in crows-foot | Torquing pole clamping hardware, torque nuts | 21, 23 |
| 15/16 in open-end wrench | Tightening pole clamping hardware | 16–19, 21, 23 |
| Stepped drill, hole saw, or die set | Cutting conduit entryways | 27 |
| Conduit, fittings, clamps, etc. | Conduit and supplies as needed for wiring routing | 27 |
| Electrical fish tape | Pulling conductors | 28, 29 |
| Main power disconnect and distribution panels | Power to lighting system | 29 |
| Electicians pliers | | 29 |
| Grounding electrode and driving sleeve* | Pole lightning ground | 30, 31 |
| Grounding conductor, AL to CU splice (if required), saddle clamp, bonding jumper, exothermic weld kit* | Pole lightning ground | 30, 31 |
| Shovel | Excavating grounding electrode | 30, 31 |
| **Musco supplies** | **Function** | **Page** |
| Snips | Cutting steel strapping | 10 |
| ½, 9/16 in offset combination wrench | Tightening strap hardware | 10, 11, 30 |
| 7/16 in ratcheting combination wrench | Tightening luminaire captive bolts | 14, 29 |
| 5 mm hex key | Landing primary feed wires on 125 A disconnect switch | 29 |
| 3/16 in hex key | Ground bar | 29, 30 |
| 2/16 in hex key | Grounding lug | 28, 31 |
| Wago brand LEVER-NUTS® wire connector | Connecting pole harness | 28 |
| **Equipment needed** | **Function** | **Page** |
| Load-rated crane and rigging | Unloading, lifting crossarm assembly | 5, 21, 22 |
| Aerial work platform | Attaching crossarm assembly to pole and other aerial work | 21, 22 |
| 10 ft (3 m) stepladder or small line truck | Attaching enclosures and enclosure wiring | 9, 25–31 |

## Components of SportsCluster Lighting System

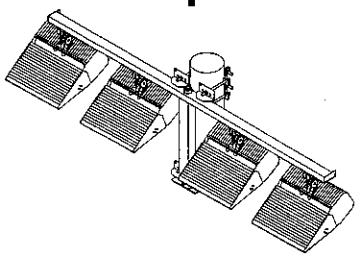

Poletop luminaire assembly and mounting hardware

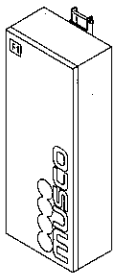


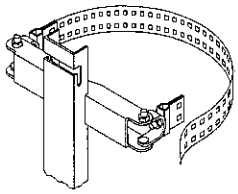

Electrical components enclosure and mounting hardware

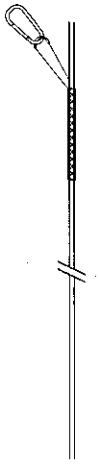

Wire harness (contractor supplied)*

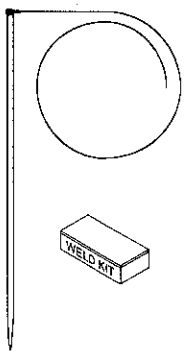


Lightning ground equipment (contractor supplied)*

* May be supplied by Musco.

©2015, 2017 Musco Sports Lighting, LLC · LED ECE 9 · M-1933-en04-5

# Before You Begin

## Unloading Instructions

A typical shipment includes electrical components enclosures, poletop luminaire assemblies, luminaire cartons, attachment hardware, and may include wire harnesses. Unload and uncrate equipment. Stage for assembly placing all matched components and hardware at the proper pole location as noted on *Field Aiming Diagram*.

### Tools/Materials Needed

- ❑ Crane or forklift
- ❑ Hammer
- ❑ Pry bar
- ❑ Banding cutters

As you unload, do the following:

- Check bill of lading to verify you have all materials.
- Inspect all materials for shipping damage.
- Store electrical components enclosures in a dry location or cover with tarp until ready to install.

If you need additional information, contact your local Musco representative.

Please recycle.
Luminaires, hardware, and other components are shipped in recyclable cardboard packaging.

## Electrical System Requirements

While portions of the SportsCluster® lighting system can be assembled by non-professionals, a qualified electrician must handle the electrical supply installation and hook-up in accordance with national, state, and local codes. Your electrician should review this information before installation begins.

The electrician is generally required to provide these items:

- Service entrance
- Main power disconnect and distribution panel(s)
- Supply wiring and equipment grounding conductors
- Lightning grounding conductor and electrode, one per pole

Ensure supply wiring is rated for 90° C. Review the label inside the electrical components enclosure door and *Control System Summary* for voltage and phase requirements. All entrance hubs must be rated NEMA 3R (IP54) or better.

Other features that may affect the wiring supply requirements for this project include:

- Lighting contactor cabinets — refer to the supplemental installation instructions and the Musco *Control System Summary*.
- Control-Link® control system — refer to the supplemental installation instructions and Musco *Control System Summary*.

Always dispose of electronic waste in accordance with all applicable laws and regulations.

# Before You Begin

## Documents We Provide

### Field Aiming Diagram

The *Field Aiming Diagram* is your map for locating all poles on your project. It gives this information:

- Pole IDs, locations, and heights
- Luminaire IDs
- Field origin for coordinate measuring
- Aiming points for each pole
- Poletop luminaire assembly mounting height
- Full load current for each luminaire

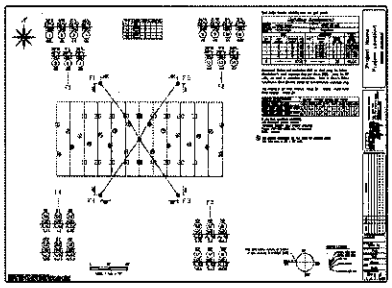

### Control System Summary

Projects with a control system include a *Control System Summary*. It gives this information:

- Control system diagram and details
- Contactors and cabinets
- Lighting circuits
- Voltage, phase, and frequency
- Full load current for each circuit

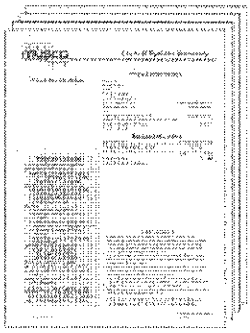

©2015, 2017 Musco Sports Lighting, LLC · LED ECE 9 · M-1933-en04-5

# Electrical Components Enclosure

## Hardware Sorting

Electrical components enclosure hardware will require sorting before assembly.

### Round Poles

| Item | Description | Quantity (per stack) | Note |
|---|---|---|---|
| A | Strap assembly | 2 – 4 | See strap selection table. |
| B | Strap bracket | 2 – 4 | |
| C | Hanger bracket (short) | 0 – 2 | |
| D | Hanger bracket (tall) | 1 | Select hanger bracket approximately 3 in (76 mm) shorter than enclosure height.<br>Hanger bracket arm width is 14 in (356 mm). |

### Strap Selection

| Diameter | Strap Length |
|---|---|
| 0 – 19 in (0 – 483 mm) | 45 in (1143 mm) |
| 19.1 – 24 in (483 – 610 mm) | 60 in (1524 mm) |
| 24.1 – 30 in (610 – 762 mm) | 78 in (1981 mm) |
| 30.1 – 36 in (762 – 914 mm) | 96 in (2438 mm) |
| 36.1 – 42 in (914 – 1067 mm) | 114 in (2896 mm) |
| 42.1 – 48 in (1067 – 1219 mm) | 132 in (3353 mm) |

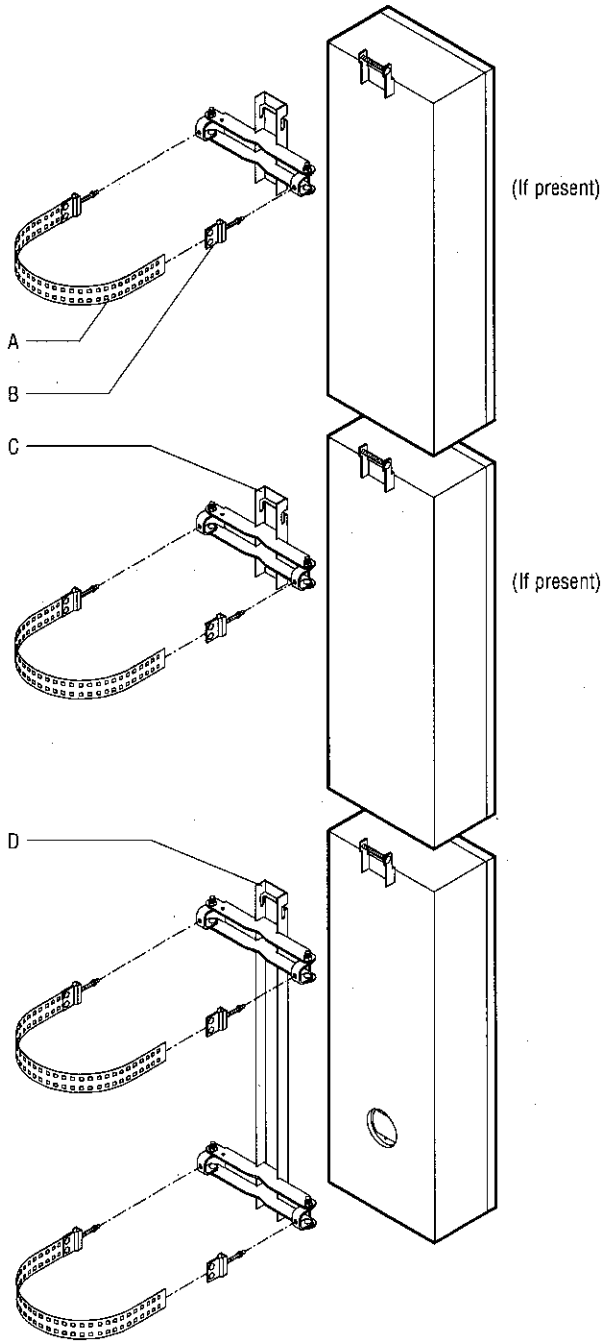


©2015, 2017 Musco Sports Lighting, LLC · LED ECE 9 · M-1933-en04-5

# Electrical Components Enclosure

### Square Poles

| Item | Description | Quantity (per stack) | Note |
|---|---|---|---|
| A | Strap assembly | 2 – 4 | See strap and bracket selection table. |
| B | Strap bracket | 2 – 4 | |
| C | Hanger Bracket (short) | 0 – 2 | See strap and bracket selection table. |
| D | Hanger bracket (tall) | 1 | Select hanger bracket approximately 3 in (76 mm) shorter than the enclosure height.<br>See strap and bracket selection table. |

### Strap and Bracket Selection

| Pole Width | Strap Length | Bracket Arm Width |
|---|---|---|
| 0 – 11 in (0 – 280 mm) | 45 in (1143 mm) | 14 in (356 mm) |
| 11.1 – 16 in (280 – 406 mm) | 45 in (1143 mm) | 18.5 in (470 mm) |
| 16.1 – 20 in (406 – 508 mm) | 60 in (1524 mm) | 22.5 in (572 mm) |
| 20.1 – 24 in (508 – 610 mm) | 78 in (1981 mm) | 26.5 in (673 mm) |
| 24.1 – 28 in (610 – 711 mm) | 96 in (2438 mm) | 30.5 in (775 mm) |

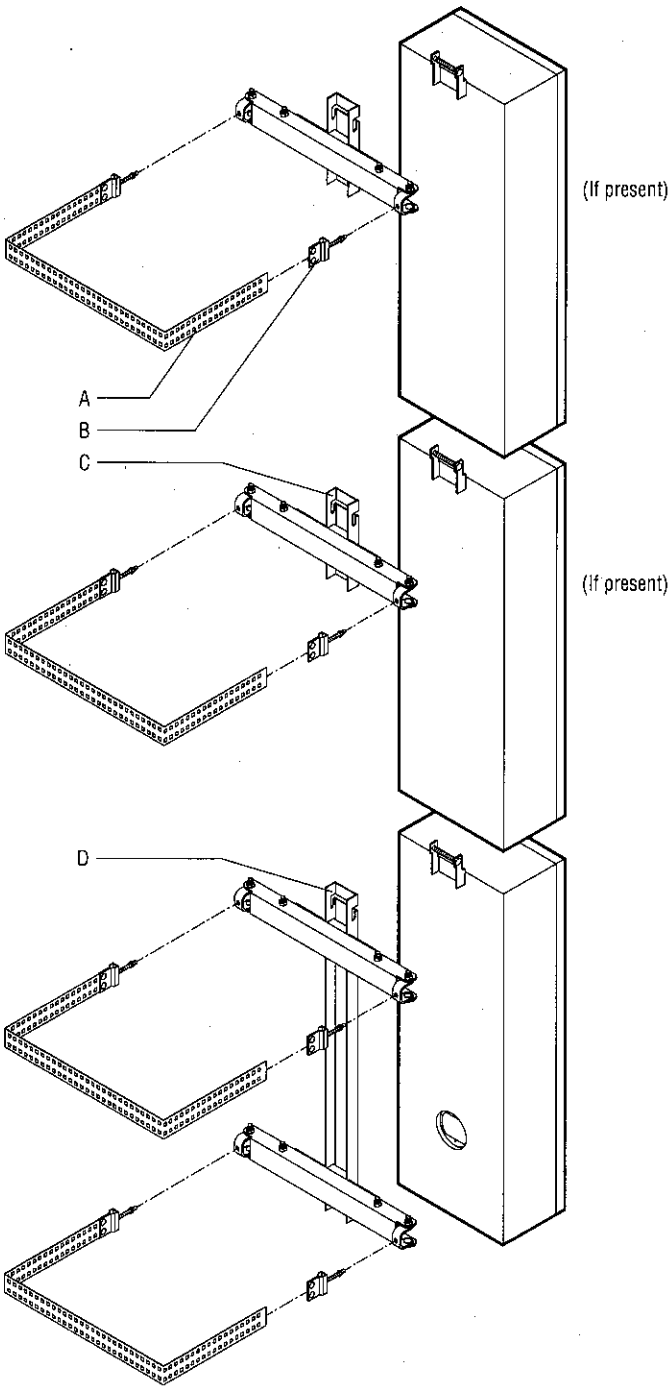


©2015, 2017 Musco Sports Lighting, LLC · LED ECE 9 · M-1933-en04-5

# Electrical Components Enclosure

## Overview

The electrical components enclosure is factory-wired and tested. It contains lamp ballasts, capacitors, fusing, and other essential components of the lighting system in an accessible location. It is ideally mounted on the pole about 10 ft (3 m) above grade to discourage tampering. You may mount it in another accessible location, however limitations on conductor length and size apply.

### Tools/Materials Needed

Musco Supplied
- ❑ ½ and 9⁄16 in offset combination wrenches
- ❑ Snips
- ❑ *Field Aiming Diagram*

Contractor Supplied
- ❑ Torque wrench with ½ and 9⁄16 in sockets
- ❑ Large Phillips-head screwdriver
- ❑ Measuring tape
- ❑ Marker
- ❑ 10 ft (3 m) stepladder or small line truck

## Installation Procedure

Verify pole ID on electrical components enclosure matches pole location on *Field Aiming Diagram*. If assembling pole on ground, determine final grade level on pole for proper measurement.

**1** Using the enclosure stack ID label located on top of the enclosures, determine quantity and orientation of enclosure hanger brackets. An orientation of "0°" indicates the enclosures face the field. See *Field Aiming Diagram* for more details.

**2** Measure and mark hanger bracket locations on pole.

### Bracket Positioning

| Stacker (Upper) Box Height | Dimension A |
|---|---|
| 28½ in (724 mm) | 19 7⁄16 in (494 mm) |
| 40½ in (1029 mm) | 31 7⁄16 in (799 mm) |

Dimension A in chart allows for approximately 0.75 in (20 mm) gap between upper and lower enclosures.

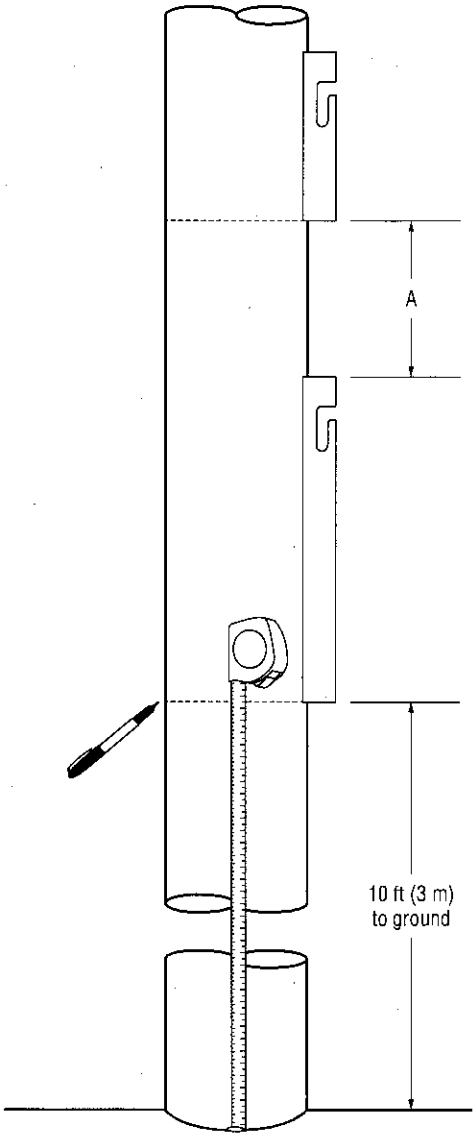


©2015, 2017 Musco Sports Lighting, LLC · LED ECE 9 · M-1933-en04-5

## Electrical Components Enclosure

**3** Cut straps to required length. Pull tight around pole and trim excess within 1 in (25 mm) of strap bracket. Cut across square holes, not between them.

**4** Attach hanger brackets to pole. Torque 5/16 in strap bracket hardware A to 12 ft•lb (16 N•m) using ½ in socket and torque wrench. Torque all 3/8 in tensioning nuts B to 20 ft•lb (27 N•m) using 9/16 in socket and torque wrench.

**Caution**
**Falling equipment hazard**
Ensure you meet torque values specified on all tensioning hardware.

If tensioning bolt is fully seated and strap is not yet tight, trim strap at next set of holes and repeat step 3.

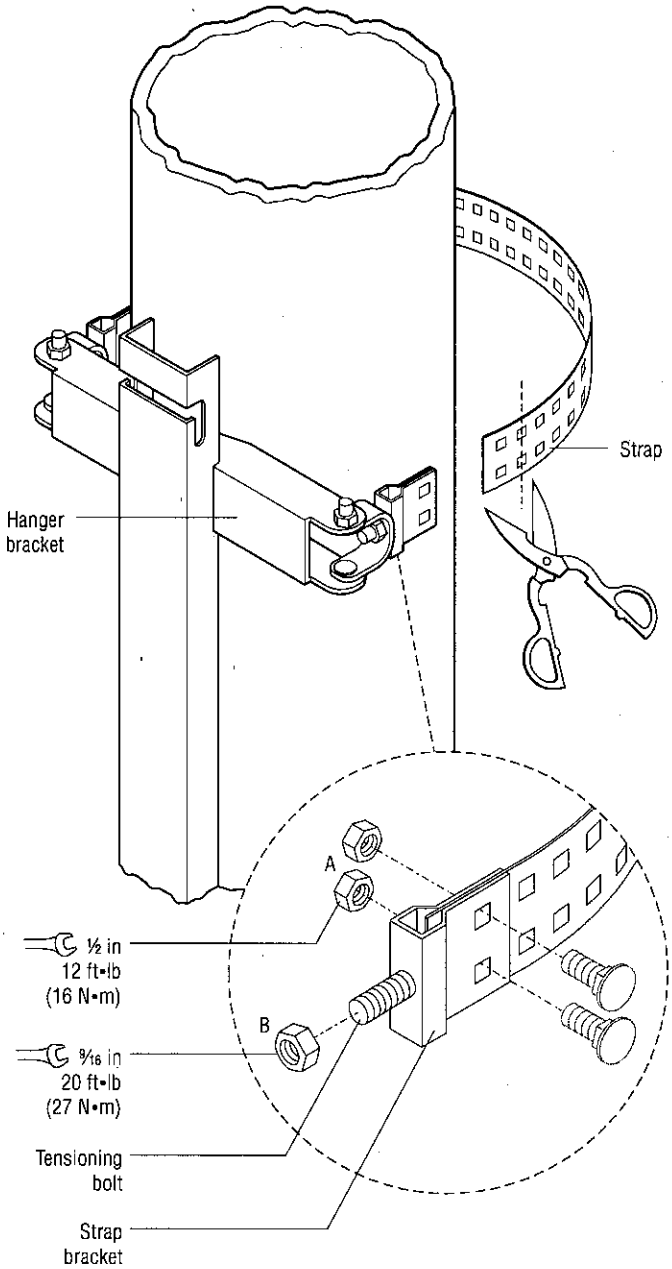


©2015, 2017 Musco Sports Lighting, LLC · LED ECE 9 · M-1933-en04-5

## Electrical Components Enclosure

**5** Mount bottom enclosure on hanger bracket. Tighten captive screws on hub. Tighten hanger bolt using provided 9/16 in wrench.

**Caution**
**Electrical components enclosures are heavy**
Electrical components enclosure may weigh up to 65 lb (30 kg). Lift carefully with two people to avoid injury.

**6** Mount middle and/or top enclosures (if present) on hanger brackets. Align hub and drop enclosure onto hanger bracket. Tighten hanger bolt(s) using provided 9/16 in wrench.

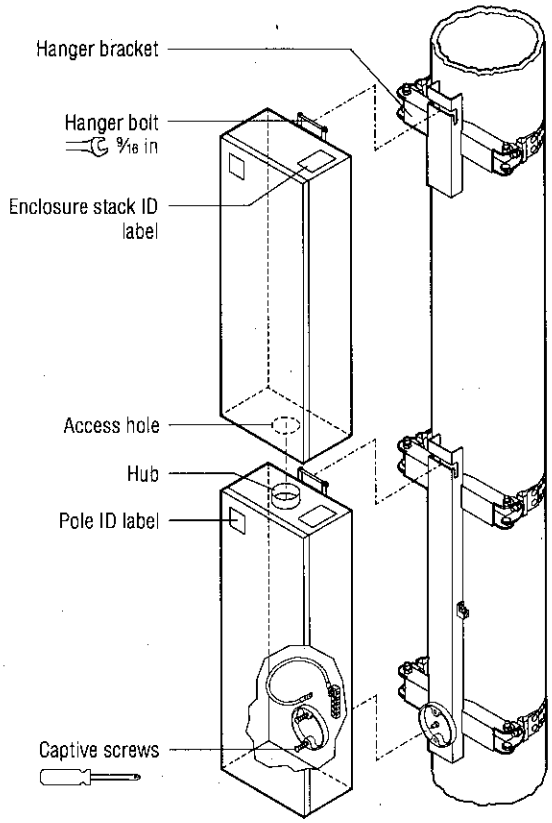


**7** Repeat steps 1 – 5 for back-to-back or multiple stacks. Offset mounting straps vertically by 3 – 5 in (75 – 125 mm).

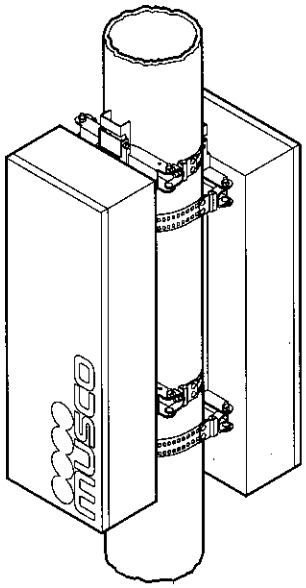

©2015, 2017 Musco Sports Lighting, LLC · LED ECE 9 · M-1933-en04-5

# Poletop Luminaire Assembly

## Overview

The luminaire assembly conveniently allows mounting of luminaires on the pole as a unit. Luminaires are factory built and shipped in individual cartons. Luminaires are factory aimed and ready for installation to poletop luminaire assembly. Do not disassemble.

### Tools/Materials Needed

Musco Supplied

- ❑ 7/16 in ratcheting combination wrench

## Assembly Procedure

✓ Verify pole ID on luminaire cartons matches pole and location on *Field Aiming Diagram.*

**1** Remove orange protective caps from luminaire knuckle and mounting plate; discard.

*Note: Do not remove temporary protective cover (if present) from luminaire until ready to set pole.*

*Note: The luminaire style may vary from what is shown.*

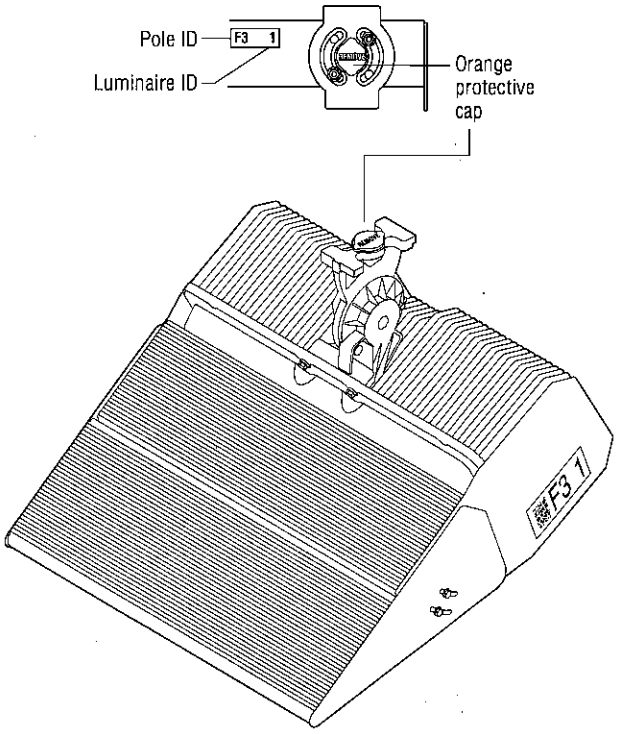


©2015, 2017 Musco Sports Lighting, LLC · LED ECE 9 · M-1933-en04-5

## Poletop Luminaire Assembly

**2** Match luminaire ID to crossarm and install luminaire onto mounting plate. Insert knuckle into mounting plate and pivot into position.

*Note: The luminaire style may vary from what is shown.*

| Luminaire | Weight |
|---|---|
| TLC-LED-400 | 35 lb (16 kg) |
| TLC-LED-600 | 45 lb (20 kg) |
| TLC-LED-900 | 114 lb (52 kg) |
| TLC-LED-1150 | 75 lb (34 kg) |
| TLC-LED-1400 | 106 lb (48 kg) |

**Caution**
Luminaire may be heavy. Lift carefully with two people to avoid injury.

**3** Attach luminaire retaining cable (if present).

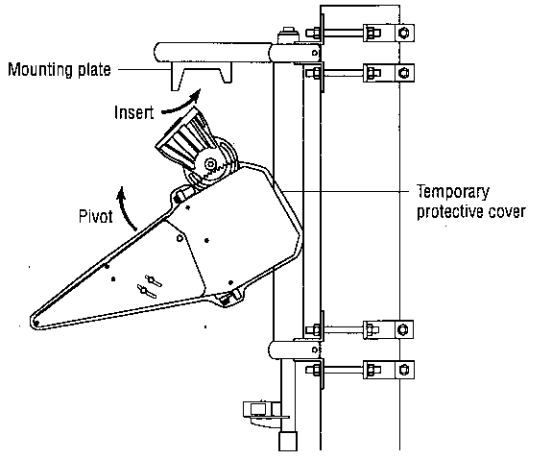


Or

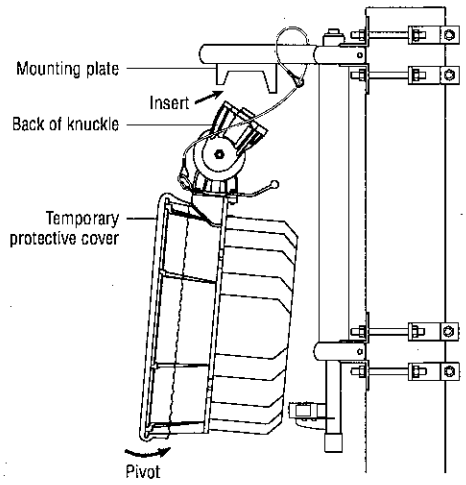


Or

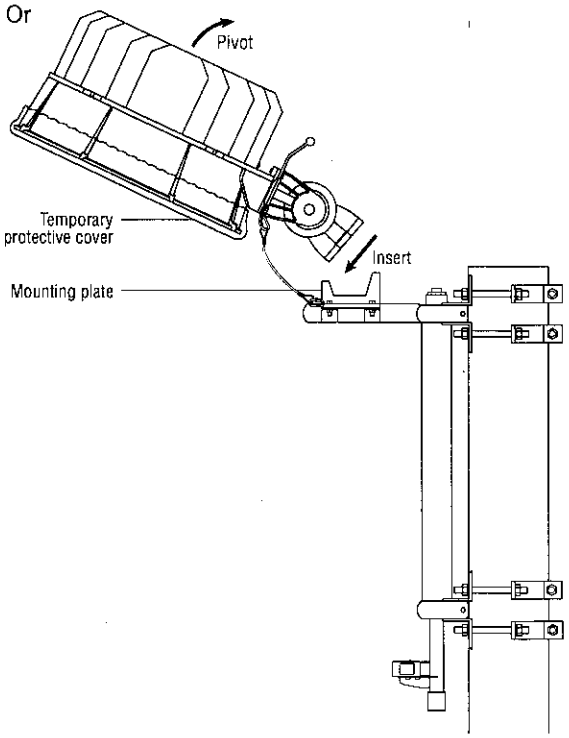


©2015, 2017 Musco Sports Lighting, LLC · LED ECE 9 · M-1933-en04-5

## Poletop Luminaire Assembly

**4** Tighten captive mounting bolts. Torque must not exceed 20 ft•lb (27 N•m). To avoid overtightening, use provided 7/16 in combination wrench.

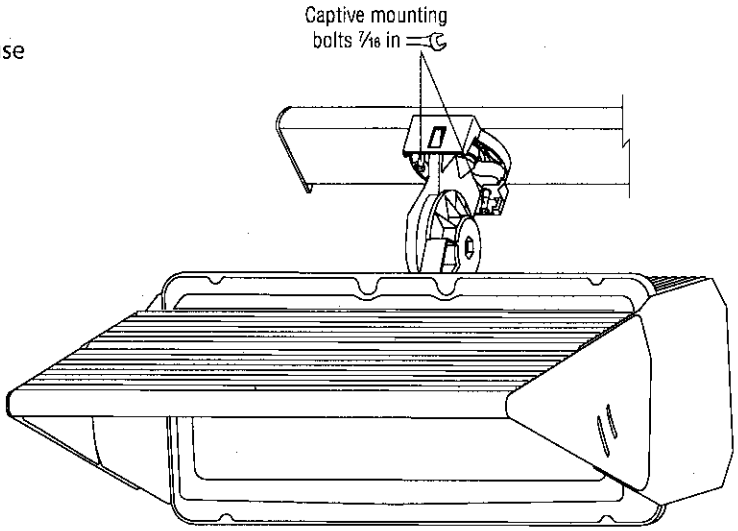


©2015, 2017 Musco Sports Lighting, LLC · LED ECE 9 · M-1933-en04-5

# Setting Poletop Luminaire Assembly

## Hardware Sorting and Preassembly

Determine necessary pole clamping hardware using illustrations provided. Partially preassemble pole clamping hardware for faster, easier aerial work. Match description and item letter below to bulk-shipped parts.

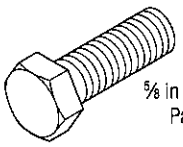

Item A
⅝ in x 1¾ in (44 mm) hex bolt
Part Number: PC-139-1

Item B
⅝ in lock washer
Part Number: PC-141-1

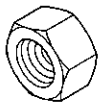

Item C
⅝ in hex nut
(standard)
Part Number: PC-140-1

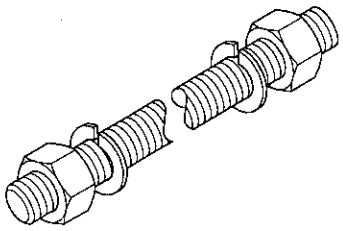

| ⅝ in threaded rod with nuts and washers | | |
|---|---|---|
| Item | Length | Part Number |
| D1 | 9½ in (241 mm) | SCR-1571-9-5 |
| D2 | 12 in (305 mm) | SCR-1571-12 |
| D3 | 14 in (356 mm) | SCR-1571-14 |
| D4 | 23½ in (597 mm) | SCR-1571-23-5 |
| D5 | 29½ in (749 mm) | SCR-1571-29-5 |
| D6 | 35½ in (902 mm) | SCR-1571-35-5 |
| D7 | 41½ in (1054 mm) | SCR-1571-41-5 |

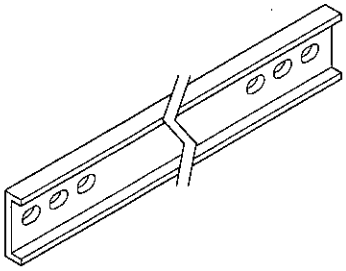

| 3 in channel | | |
|---|---|---|
| Item | Length | Part Number |
| E1 | 15½ in (394 mm) | SCR-1501-1 |
| E2 | 23½ in (597 mm) | SCR-1500-1 |
| E3 | 28½ in (724 mm) | SCR-1502-1 |
| E4 | 34½ in (876 mm) | SCR-1504-1 |
| E5 | 41 in (1041 mm) | SCR-1506-1 |

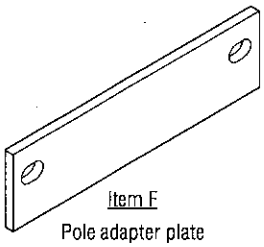

Item F
Pole adapter plate
⅜ in x 3 in (76 mm) x 11¼ in (286 mm)
Part Number: SCR-1119-1

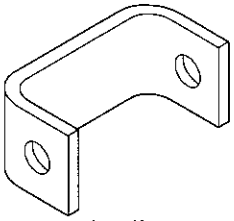

Item K
C-shaped bracket
1¾ in (44 mm) wide
Part Number: SCR-1120-1

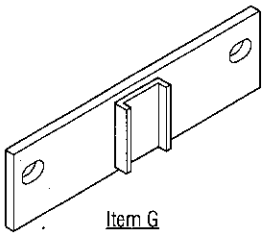

Item G
Pole adapter plate with channel
⅜ in x 3 in (76 mm) x 11¼ in (286 mm)
Part Number: PC-143

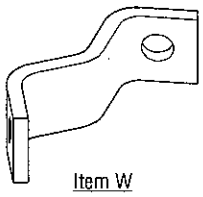

Item W
W-shaped bracket
1¾ in (44 mm) wide
Part Number: PC-135

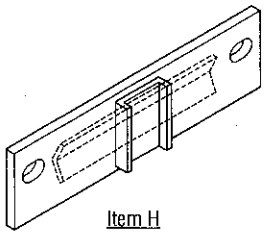

Item H
Pole adapter plate with channel and brace
⅜ in x 3 in (76 mm) x 11¼ in (286 mm)
Part Number: PC-142

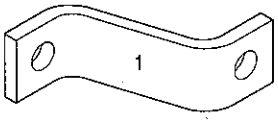


Item Z1
Z-shaped bracket, type 1
steep angle 1¾ in (44 mm) wide
Part Number: PC-210

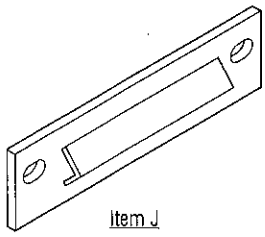

Item J
Pole adapter plate with brace
⅜ in x 3 in (76 mm) x 11¼ in (286 mm)
Part Number: SCR-1121-1

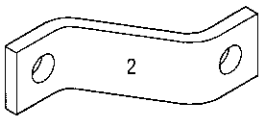


Item Z2
Z-shaped bracket, type 2
shallow angle 1¾ in (44 mm) wide
Part Number: SCR-1118-1

©2015, 2017 Musco Sports Lighting, LLC · LED ECE 9 · M-1933-en04-5

# Setting Poletop Luminaire Assembly

## Round poles – front side only

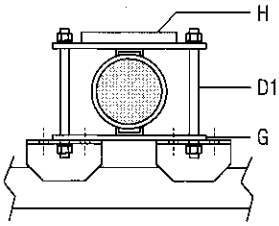


Use middle holes

**Up to 5.50 in (140 mm) diameter**

| Item | Qty | Description |
|---|---|---|
| D1 | (2) | ⅝ in x 9½ in (241 mm) threaded rod with nuts and washers |
| G | (1) | Pole adapter plate with channel |
| H | (1) | Pole adapter plate with channel and brace |

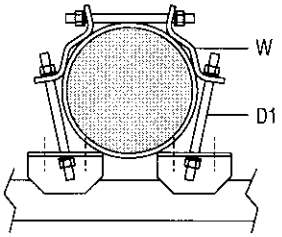


Use middle holes

**5.51 – 10.00 in (140 – 254 mm) diameter**

| Item | Qty | Description |
|---|---|---|
| D1 | (3) | ⅝ in x 9½ in (241 mm) threaded rod with nuts and washers |
| W | (2) | W-shaped bracket |

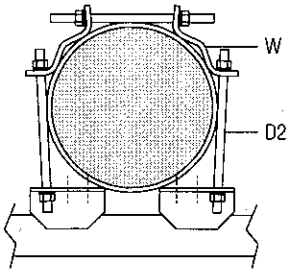


Use outer holes

**10.01 – 12.50 in (254 – 318 mm) diameter**

| Item | Qty | Description |
|---|---|---|
| D2 | (3) | ⅝ in x 12 in (305 mm) threaded rod with nuts and washers |
| W | (2) | W-shaped bracket |

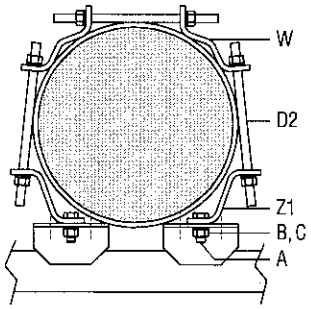


Use middle holes

**12.51 – 15.00 in (318 – 381 mm) diameter**

| Item | Qty | Description |
|---|---|---|
| A | (2) | ⅝ in x 1¾ in (44 mm) bolt |
| B | (2) | ⅝ in lock washer |
| C | (2) | ⅝ in hex nut |
| D2 | (3) | ⅝ in x 12 in (305 mm) threaded rod with nuts and washers |
| W | (2) | W-shaped bracket |
| Z1 | (2) | Z-shaped bracket, type 1 |

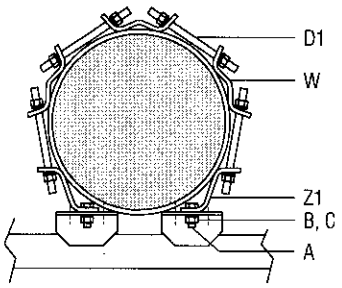


Use middle holes

**15.01 – 16.50 in (381 – 419 mm) diameter**

| Item | Qty | Description |
|---|---|---|
| A | (2) | ⅝ in x 1¾ in (44 mm) bolt |
| B | (2) | ⅝ in lock washer |
| C | (2) | ⅝ in hex nut |
| D1 | (4) | ⅝ in x 9½ in (241 mm) threaded rod with nuts and washers |
| W | (3) | W-shaped bracket |
| Z1 | (2) | Z-shaped bracket, type 1 |

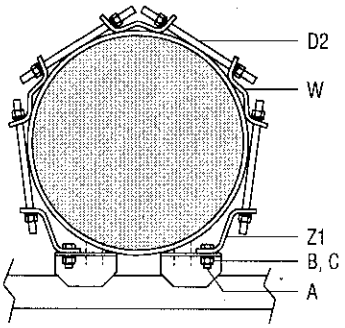


Use outer holes

**16.51 – 20.00 in (419 – 508 mm) diameter**

| Item | Qty | Description |
|---|---|---|
| A | (2) | ⅝ in x 1¾ in (44 mm) bolt |
| B | (2) | ⅝ in lock washer |
| C | (2) | ⅝ in hex nut |
| D2 | (4) | ⅝ in x 12 in (305 mm) threaded rod with nuts and washers |
| W | (3) | W-shaped bracket |
| Z1 | (2) | Z-shaped bracket, type 1 |

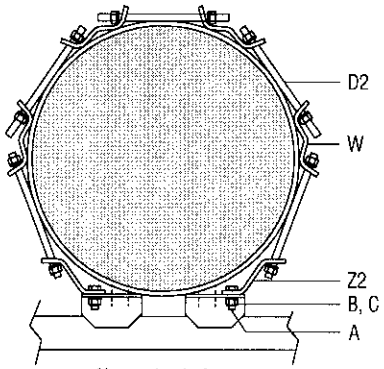


Use outer holes

**20.01 – 25.00 in (508 – 635 mm) diameter**

| Item | Qty | Description |
|---|---|---|
| A | (2) | ⅝ in x 1¾ in (44 mm) bolt |
| B | (2) | ⅝ in lock washer |
| C | (2) | ⅝ in hex nut |
| D2 | (5) | ⅝ in x 12 in (305 mm) threaded rod with nuts and washers |
| W | (4) | W-shaped bracket |
| Z2 | (2) | Z-shaped bracket, type 2 |

©2015, 2017 Musco Sports Lighting, LLC · LED ECE 9 · M-1933-en04-5

# Setting Poletop Luminaire Assembly

## Round poles – front and back sides

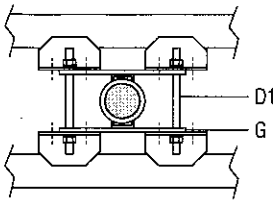


Use middle holes

**Up to 4.00 in (102 mm) diameter**

| Item | Qty | Description |
|---|---|---|
| D1 | (2) | ⅝ in x 9½ in (241 mm) threaded rod with nuts and washers |
| G | (2) | Pole adapter plate with channel |

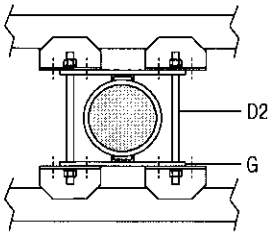


Use middle holes

**4.01 – 7.00 in (102 – 178 mm) diameter**

| Item | Qty | Description |
|---|---|---|
| D2 | (2) | ⅝ in x 12 in (305 mm) threaded rod with nuts and washers |
| G | (2) | Pole adapter plate with channel |

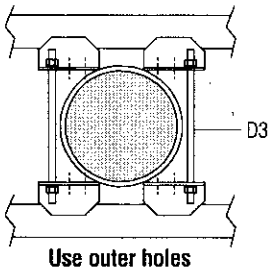


Use outer holes

**7.01 – 11.00 in (178 – 280 mm) diameter**

| Item | Qty | Description |
|---|---|---|
| D3 | (2) | ⅝ in x 14 in (356 mm) threaded rod with nuts and washers |

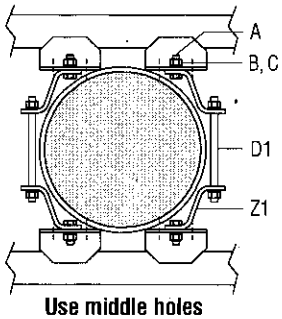


Use middle holes

**11.01 – 15.00 in (280 – 381 mm) diameter**

| Item | Qty | Description |
|---|---|---|
| A | (4) | ⅝ in x 1¾ in (44 mm) bolt |
| B | (4) | ⅝ in lock washer |
| C | (4) | ⅝ in hex nut |
| D1 | (2) | ⅝ in x 9½ in (241 mm) threaded rod with nuts and washers |
| Z1 | (4) | Z-shaped bracket, type 1 |

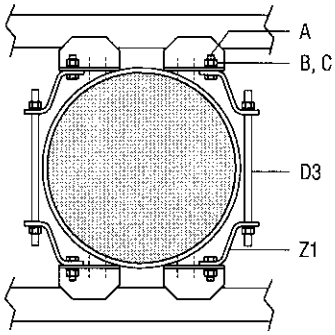


Use outer holes

**15.01 – 18.00 in (381 – 457 mm) diameter**

| Item | Qty | Description |
|---|---|---|
| A | (4) | ⅝ in x 1¾ in (44 mm) bolt |
| B | (4) | ⅝ in lock washer |
| C | (4) | ⅝ in hex nut |
| D3 | (2) | ⅝ in x 14 in (356 mm) threaded rod with nuts and washers |
| Z1 | (4) | Z-shaped bracket, type 1 |

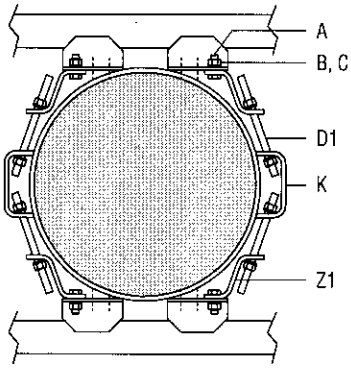


Use outer holes

**18.01 – 21.00 in (457 – 534 mm) diameter**

| Item | Qty | Description |
|---|---|---|
| A | (4) | ⅝ in x 1¾ in (44 mm) bolt |
| B | (4) | ⅝ in lock washer |
| C | (4) | ⅝ in hex nut |
| D1 | (4) | ⅝ in x 9½ in (241 mm) threaded rod with nuts and washers |
| K | (2) | C-shaped bracket |
| Z1 | (4) | Z-shaped bracket, type 1 |

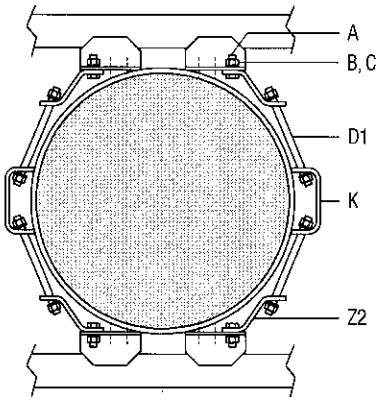


Use outer holes

**21.01 – 24.00 in (534 – 610 mm) diameter**

| Item | Qty | Description |
|---|---|---|
| A | (4) | ⅝ in x 1¾ in (44 mm) bolt |
| B | (4) | ⅝ in lock washer |
| C | (4) | ⅝ in hex nut |
| D1 | (4) | ⅝ in x 9½ in (241 mm) threaded rod with nuts and washers |
| K | (2) | C-shaped bracket |
| Z2 | (4) | Z-shaped bracket, type 2 |

©2015, 2017 Musco Sports Lighting, LLC · LED ECE 9 · M-1933-en04-5

# Setting Poletop Luminaire Assembly

## Square poles – front side only

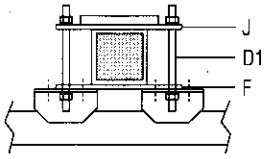


Use middle holes

**Up to 5.00 in (127 mm)**

| Item | Qty | Description |
|---|---|---|
| D1 | (2) | ⅝ in x 9½ in (241 mm) threaded rod with nuts and washers |
| F | (1) | Pole adapter plate |
| J | (1) | Pole adapter plate with brace |

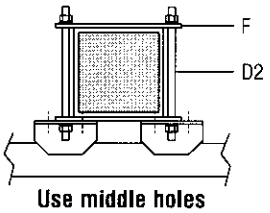


Use middle holes

**5.01 – 8.00 in (127 – 203 mm)**

| Item | Qty | Description |
|---|---|---|
| D2 | (2) | ⅝ in x 12 in (305 mm) threaded rod with nuts and washers |
| F | (2) | Pole adapter plate |

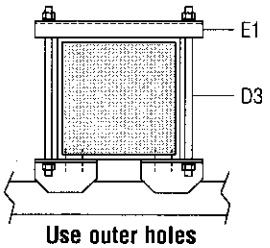


Use outer holes

**8.01 – 10.00 in (204 – 254 mm)**

| Item | Qty | Description |
|---|---|---|
| D3 | (2) | ⅝ in x 14 in (356 mm) threaded rod with nuts and washers |
| E1 | (1) | 3 in channel x 15½ in (394 mm) |

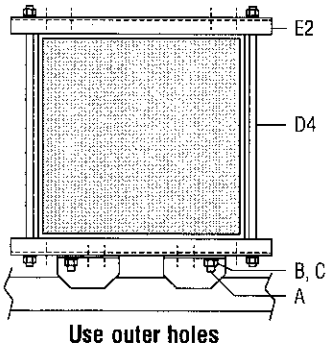


Use outer holes

**10.01 – 18.50 in (255 – 470 mm)**

| Item | Qty | Description |
|---|---|---|
| A | (2) | ⅝ in x 1¾ in (44 mm) bolt |
| B | (2) | ⅝ in lock washer |
| C | (2) | ⅝ in hex nut |
| D4 | (2) | ⅝ in x 23½ in (597 mm) threaded rod with nuts and washers |
| E2 | (2) | 3 in channel x 23½ in (597 mm) |

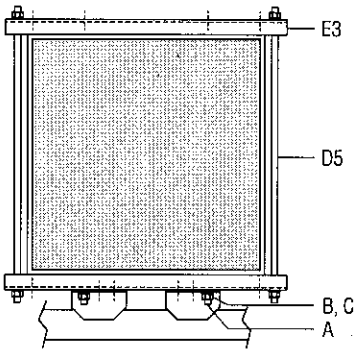


Use outer holes

**18.51 – 24.00 in (470 – 610 mm)**

| Item | Qty | Description |
|---|---|---|
| A | (2) | ⅝ in x 1¾ in (44 mm) bolt |
| B | (2) | ⅝ in lock washer |
| C | (2) | ⅝ in hex nut |
| D5 | (2) | ⅝ in x 29½ in (749 mm) threaded rod with nuts and washers |
| E3 | (2) | 3 in channel x 28½ in (724 mm) |

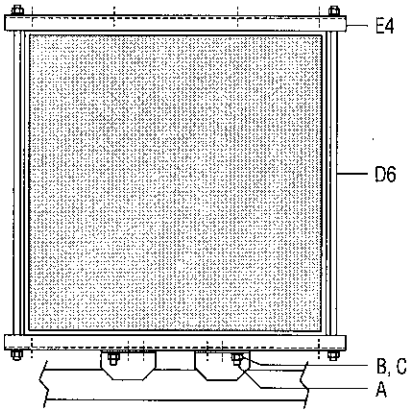


Use outer holes

**24.01 – 30.50 in (610 – 775 mm)**

| Item | Qty | Description |
|---|---|---|
| A | (2) | ⅝ in x 1¾ in (44 mm) bolt |
| B | (2) | ⅝ in lock washer |
| C | (2) | ⅝ in hex nut |
| D6 | (2) | ⅝ in x 35½ in (902 mm) threaded rod with nuts and washers |
| E4 | (2) | 3 in channel x 34½ in (876 mm) |

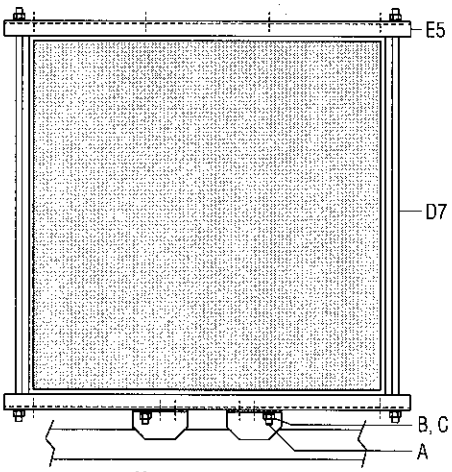


Use outer holes

**30.51 – 36.50 in (775 – 927 mm)**

| Item | Qty | Description |
|---|---|---|
| A | (2) | ⅝ in x 1¾ in (44 mm) bolt |
| B | (2) | ⅝ in lock washer |
| C | (2) | ⅝ in hex nut |
| D7 | (2) | ⅝ in x 41½ in (1054 mm) threaded rod with nuts and washers |
| E5 | (2) | 3 in channel x 41 in (1041 mm) |

©2015, 2017 Musco Sports Lighting, LLC · LED ECE 9 · M-1933-en04-5

# Setting Poletop Luminaire Assembly

## Square poles – front and back side

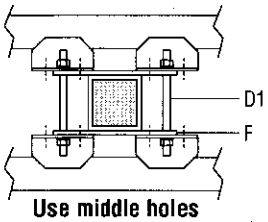


Use middle holes

**Up to 5.00 in (127 mm)**

| Item | Qty | Description |
|---|---|---|
| D1 | (2) | ⅝ in x 9½ in (241 mm) threaded rod with nuts and washers |
| F | (2) | Pole adapter plate |

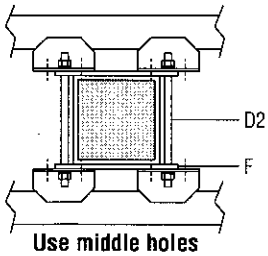


Use middle holes

**5.01 – 8.00 in (127 – 203 mm)**

| Item | Qty | Description |
|---|---|---|
| D2 | (2) | ⅝ in x 12 in (305 mm) threaded rod with nuts and washers |
| F | (2) | Pole adapter plate |

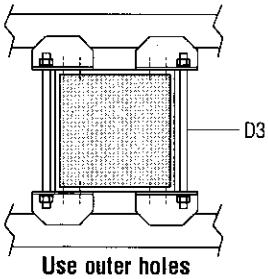


Use outer holes

**8.01 – 11.00 in (204 – 280 mm)**

| Item | Qty | Description |
|---|---|---|
| D3 | (2) | ⅝ in x 14 in (356 mm) threaded rod with nuts and washers |

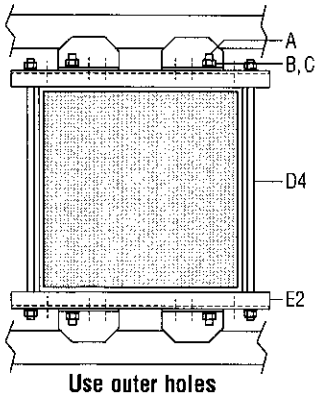


Use outer holes

**11.01 – 18.50 in (280 – 470 mm)**

| Item | Qty | Description |
|---|---|---|
| A | (4) | ⅝ in x 1¾ in (44 mm) bolt |
| B | (4) | ⅝ in lock washer |
| C | (4) | ⅝ in hex nut |
| D4 | (2) | ⅝ in x 23½ in (597 mm) threaded rod with nuts and washers |
| E2 | (2) | 3 in channel x 23½ in (597 mm) |

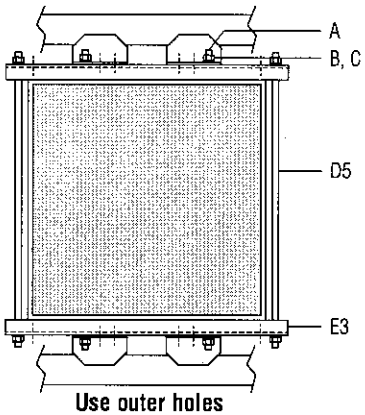


Use outer holes

**18.51 – 24.00 in (470 – 610 mm)**

| Item | Qty | Description |
|---|---|---|
| A | (4) | ⅝ in x 1¾ in 44 mm) bolt |
| B | (4) | ⅝ in lock washer |
| C | (4) | ⅝ in hex nut |
| D5 | (2) | ⅝ in x 29½ in (749 mm) threaded rod with nuts and washers |
| E3 | (2) | 3 in channel x 28½ in (724 mm) |

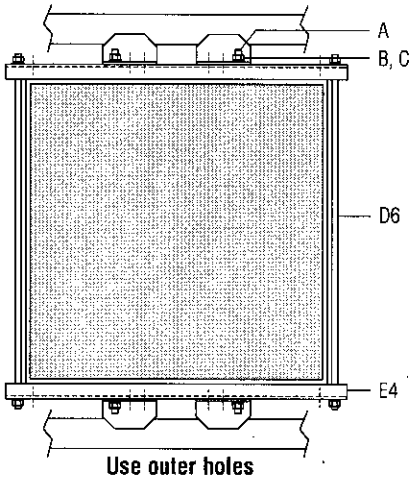


Use outer holes

**24.01 – 30.50 in (610 – 775 mm)**

| Item | Qty | Description |
|---|---|---|
| A | (4) | ⅝ in x 1¾ in (44 mm) bolt |
| B | (4) | ⅝ in lock washer |
| C | (4) | ⅝ in hex nut |
| D6 | (2) | ⅝ in x 35½ in (902 mm) threaded rod with nuts and washers |
| E4 | (2) | 3 in channel x 34½ in (876 mm) |

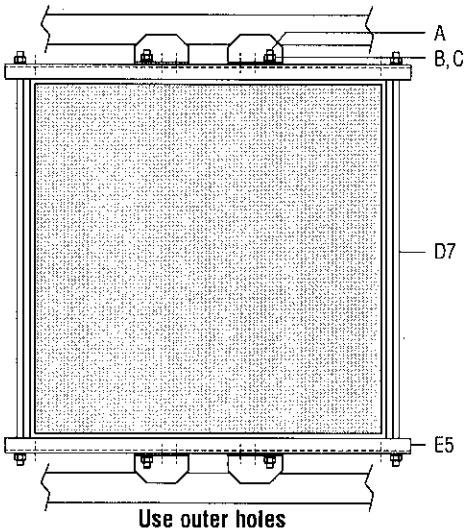


Use outer holes

**30.51 – 36.50 in (775 – 927 mm)**

| Item | Qty | Description |
|---|---|---|
| A | (4) | ⅝ in x 1¾ in (44 mm) bolt |
| B | (4) | ⅝ in lock washer |
| C | (4) | ⅝ in hex nut |
| D7 | (2) | ⅝ in x 41½ in (1054 mm) threaded rod with nuts and washers |
| E5 | (2) | 3 in channel x 41 in (1041 mm) |

©2015, 2017 Musco Sports Lighting, LLC · LED ECE 9 · M-1933-en04-5

# Setting Poletop Luminaire Assembly

## Overview

All luminaires are factory aimed to their exact position on the field. To ensure proper poletop luminaire assembly alignment, a simple-to-use alignment beam completes the precision field aiming. The alignment beam is attached in the factory to one poletop luminaire assembly on each pole.

### Tools/Materials Needed

Contractor Supplied

- ❑ 15⁄16 in open-end torque wrench or torque wrench with 15⁄16 in crows-foot
- ❑ 15⁄16 in open-end wrench
- ❑ Chalk or flags to mark aiming points on field
- ❑ Measuring tape

## Installation Procedure

**1** Plot and mark aiming point(s) on field. Refer to *Field Aiming Diagram*.

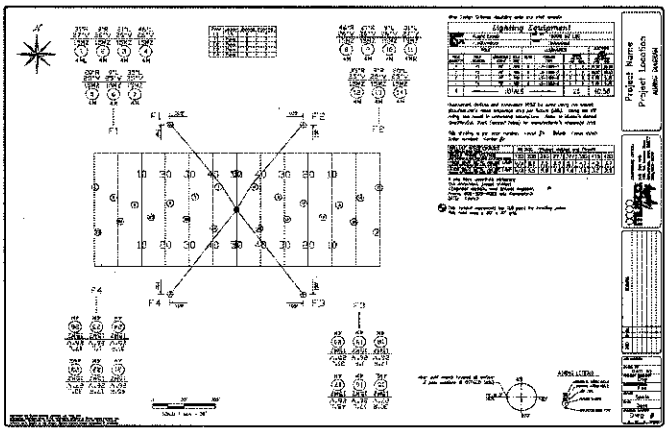

## Setting Poletop Luminaire Assembly

**2** Remove plastic wrap from luminaires. Do not use knife.

**3** Turn on pole alignment beam.

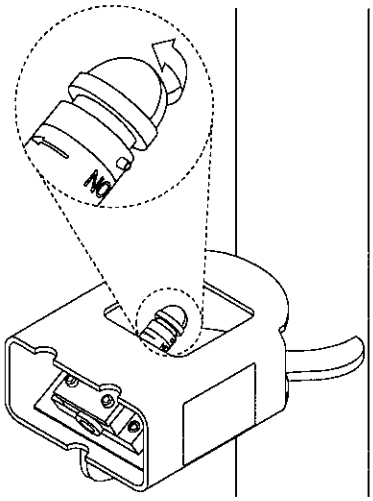


**Warning**
**Hazard of falling personnel and materials**
Use separate lifting equipment for assemblers and materials. Sling luminaire assembly properly and do not release from suspension until all pole clamping hardware is installed and torqued.

**4** Attach luminaire assembly to pole using pole clamping hardware.

If pole is already standing, sling and lift luminaire assembly to poletop location.

If assembling pole on ground, ensure all pole clamping hardware is torqued to 80 ft•lb (108 N•m) using 15/16 in open-end torque wrench before lifting pole (see step 5). Instead of turning luminaire assembly, turn pole to align with aiming point.

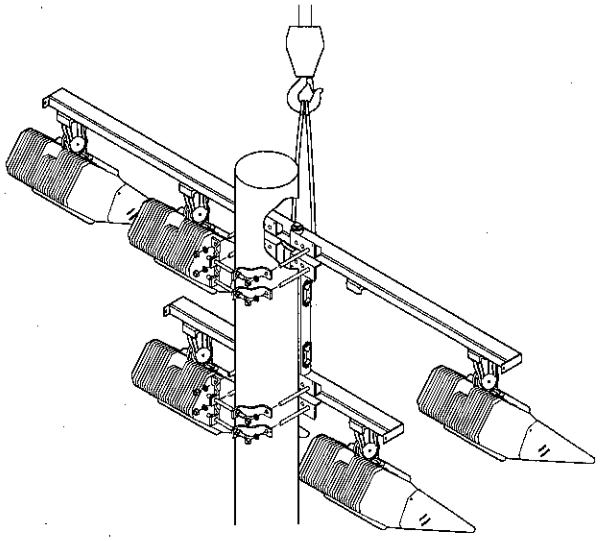

If assembling multiple poletop luminaire assemblies ensure crossarms are parallel.

Correct

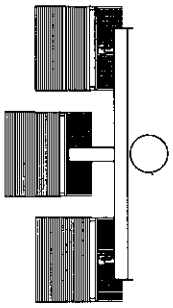

Incorrect

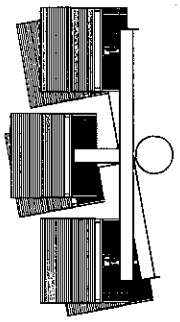

©2015, 2017 Musco Sports Lighting, LLC · LED ECE 9 · M-1933-en04-5

## Setting Poletop Luminaire Assembly

**5** Aim luminaire assembly using alignment beam. Device projects a narrow vertical beam of light that is only visible when you are aligned with it. This step requires two people.

**Person A:** Stand on field aiming point and look at pole alignment device. It is attached to a luminaire. Walk parallel to crossarms until you see beam. Signal person B to rotate luminaire assembly left or right until beam aligns with aiming point. Beam may be visible, however when pole is aligned, you will see a bright flash as you stand directly on aiming point.

**Person B:** Following direction from person A, rotate luminaire assembly left or right until it is aligned.

**Warning**
**Falling material hazard**
If erecting pole with luminaire assembly attached, do not attach rigging to luminaire assembly. Follow pole supplier instructions for lifting.

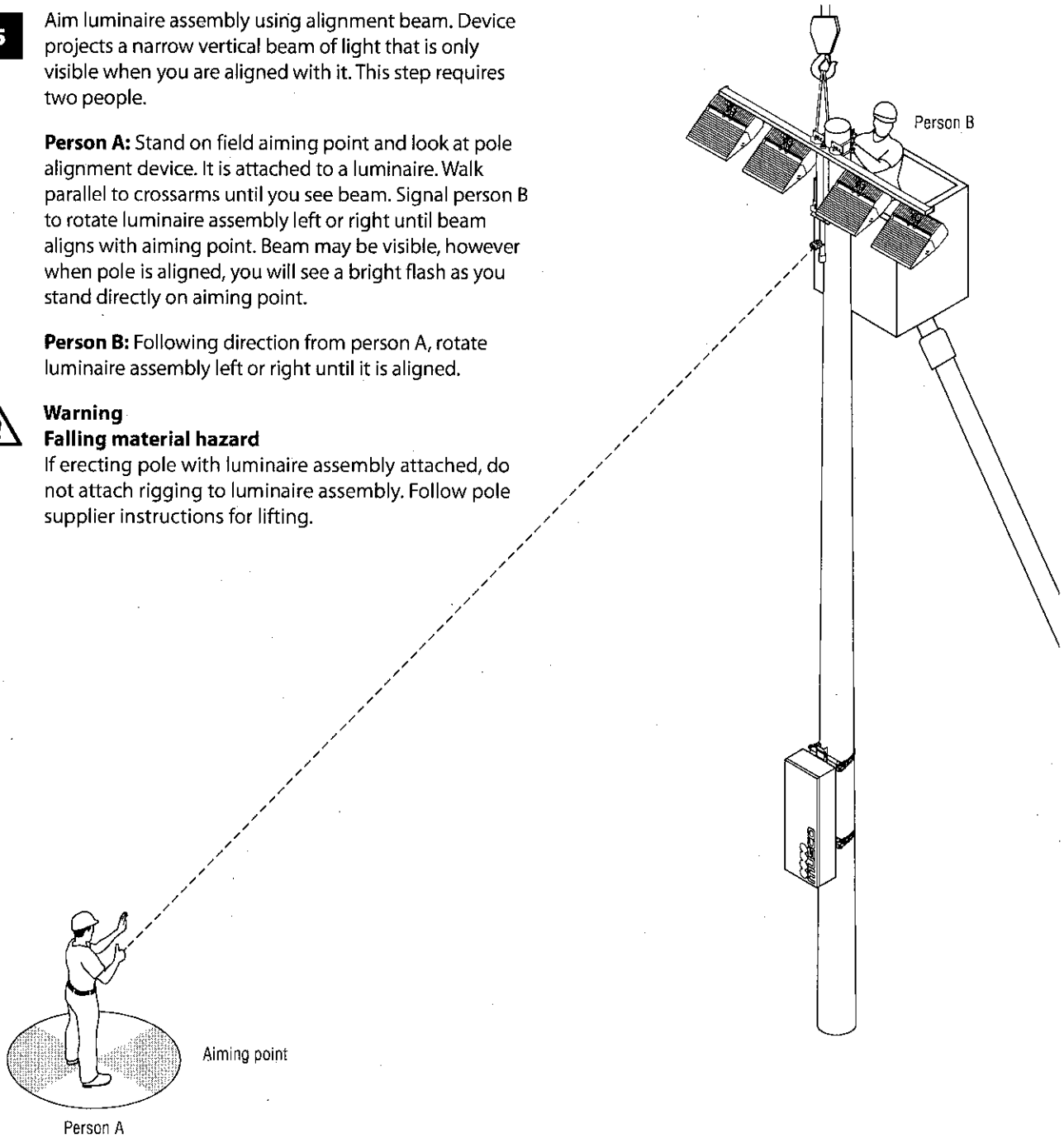


**Warning**
**Laser radiation hazard**
Pole alignment beam is safe for viewing at a distance of three feet (one meter) or more. Do not look into beam from closer than three feet (one meter). Do not use binoculars, camera, or telescope to view beam from any distance. Locator beam is a class 2M laser device. Wavelength: 635-660 nm, Laser power for classification: <1 mW continuous, divergence: <1.5 mrad x 1 rad. Using alignment beam in a manner other than as described here may result in hazardous exposure. Do not modify, dismantle, or attempt to repair.

©2015, 2017 Musco Sports Lighting, LLC · LED ECE 9 · M-1933-en04-5

## Setting Poletop Luminaire Assembly

**6** Tighten pole clamping hardware. Torque all nuts to 80 ft•lb (108 N•m) using 15/16 in open-end torque wrench.

✓ Ensure back-to-back crossarms remain parallel while tightening.

**7** After all hardware is torqued and poletop luminaire assembly is secure, release rigging.

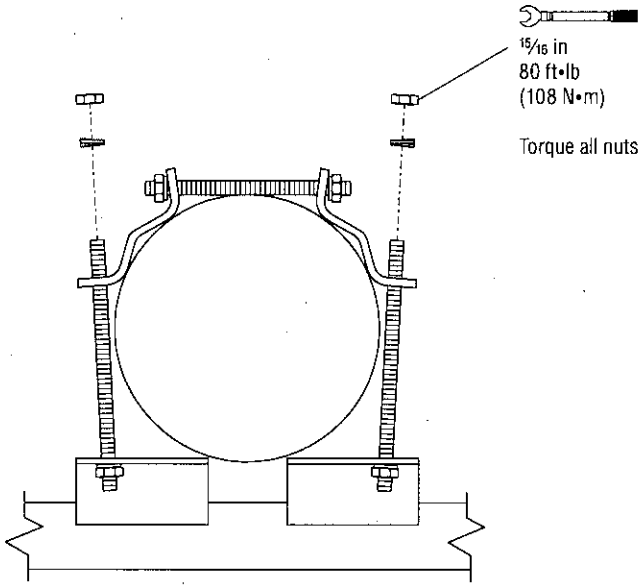


*Note: Pole clamping hardware configuration varies with pole diameter and shape. See pages 15 – 19 for proper pole clamping hardware configuration. Poletop luminaire assemblies mounted to tapered poles may have different configurations for upper and lower clamps.*


©2015, 2017 Musco Sports Lighting, LLC · LED ECE 9 · M-1933-en04-5

# Wiring

## Overview and System Diagram

A qualified electrician must install supply wiring for each lighting circuit and install harness between electrical components enclosure and crossarm assemblies. Depending on configuration, Musco may supply factory-built pole harness(es), and/or disconnect switch(es) in the electrical components enclosure. Each electrical components enclosure may contain up to four drivers. Each driver may power up to two luminaires.

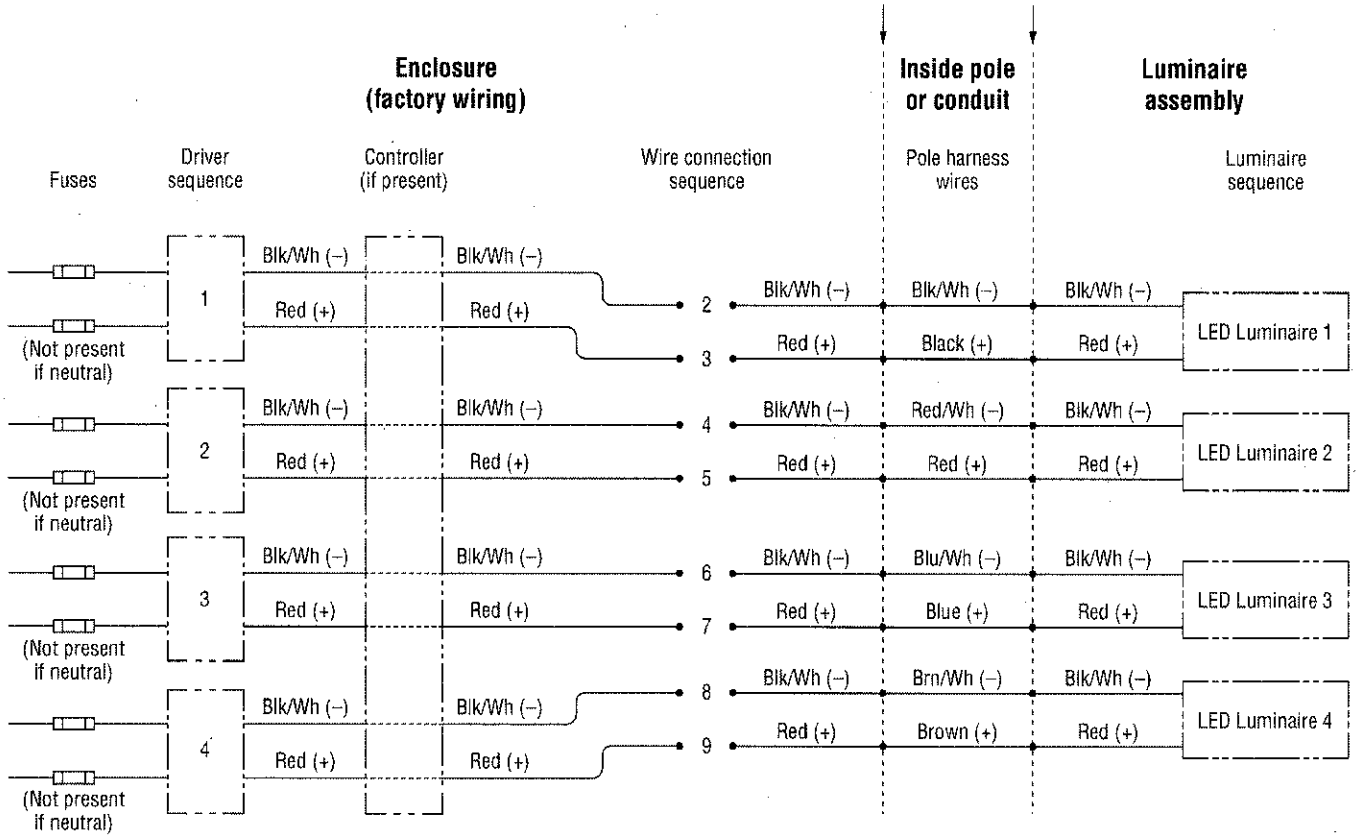


Notes:

1. Pole harness wire color indicated if provided by Musco.
2. Enclosure factory wiring may be different than shown above. One pair of wires per luminaire is required in pole harness.

# Wiring

### Tools/Materials Needed

Musco Supplied
- ❑ *Field Aiming Diagram*
- ❑ *Control System Summary*
- ❑ 7/16 in ratcheting combination wrench
- ❑ 3/16 in hex key (ground bar)
- ❑ 5 mm hex key (125 A disconnect terminals if present)
- ❑ Wire harness ID labels

Contractor Supplied
- ❑ Conduit and hubs rated NEMA 3R (IP54 ) or better
- ❑ Supply and equipment grounding conductor sized per code.
- ❑ Standard screwdriver
- ❑ Hole punch or stepped drill/hole saw
- ❑ Electrical fish tape
- ❑ 10 ft (3 m) stepladder or small line truck

## Installation Procedure

✓ Only qualified personnel may perform wiring. Route wires as shown in step 1, but leave the final connections for your electrician.

**1** Route driver harnesses from top and middle enclosures to bottom enclosure and plug into primary wire harnesses mounted in bracket.

**2** Route equipment grounding conductor and enclosure harnesses from top and middle enclosures to bottom enclosure.

**3** Repeat steps 1 – 2 for each stack.

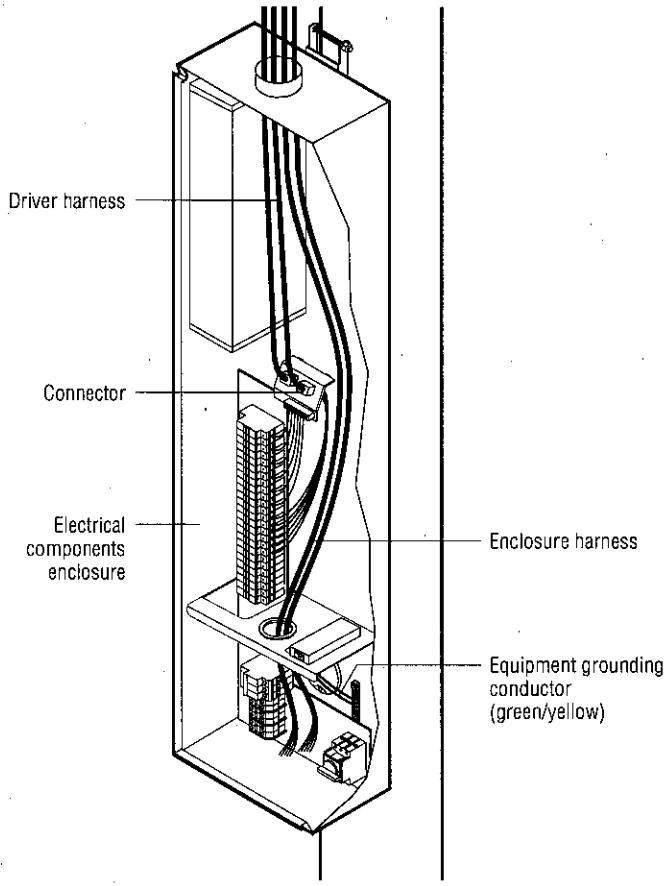


©2015, 2017 Musco Sports Lighting, LLC · LED ECE 9 · M-1933-en04-5

## Wiring

If controller is not present, skip to step 5.

**4** Route and connect communication cable in each electrical components enclosure to termination point in next sequential electrical components enclosure per illustration.

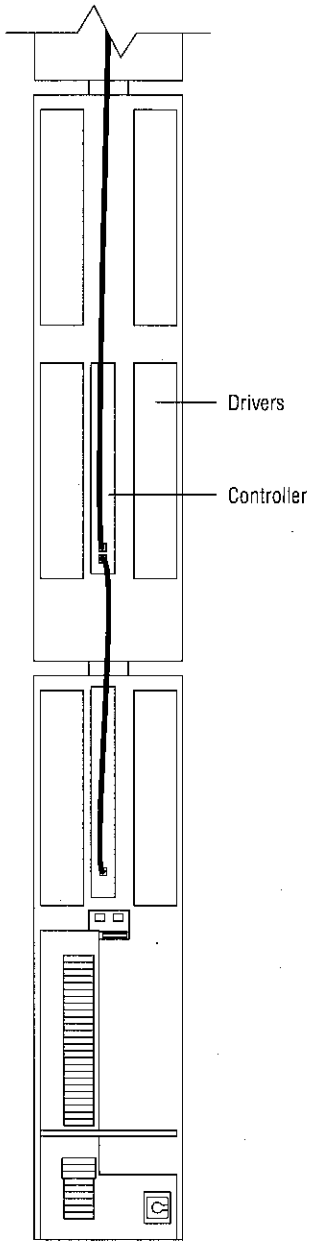


©2015, 2017 Musco Sports Lighting, LLC · LED ECE 9 · M-1933-en04-5

## Wiring

**5** Install conduit as needed for supply and/or luminaire wiring. Cut all entryways below electrical components enclosure partition.

*Note: Connect the electrical components enclosure stacks that share a circuit, with conduit below partition in order to route primary wires to distribution lugs.*

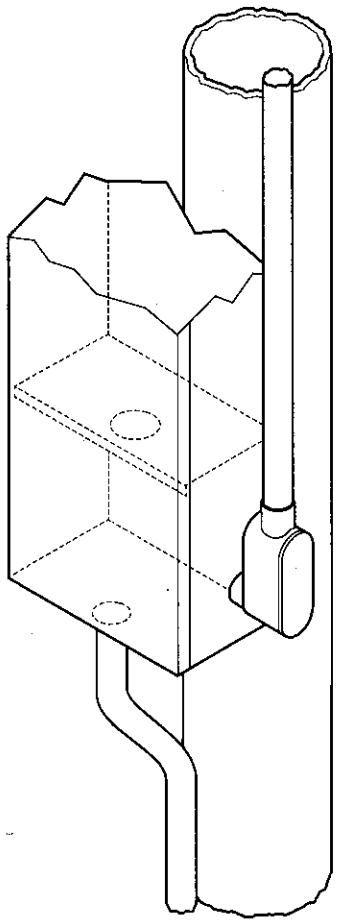

©2015, 2017 Musco Sports Lighting, LLC · LED ECE 9 · M-1933-en04-5

## Wiring

Verify pole ID on wire harness matches pole location on *Field Aiming Diagram*.

**6** Fish all pole wire harnesses between poletop and appropriate electrical components enclosure(s).

**7** Attach support grips at poletop and midpole (if required due to pole height).

**8** Trim wire harness to length (if required). If luminaire polarity wire ID labels are trimmed off, apply new ID labels (supplied by Musco).

**9** Connect pole harness at poletop and inside electrical components enclosure(s). Match luminaire ID and wire polarity per each wire label. Use the Musco-provided LEVER-NUTS® wire connectors

Use electrical tape to ensure LEVER-NUTS® levers stay secure and don't snag on surrounding wires.

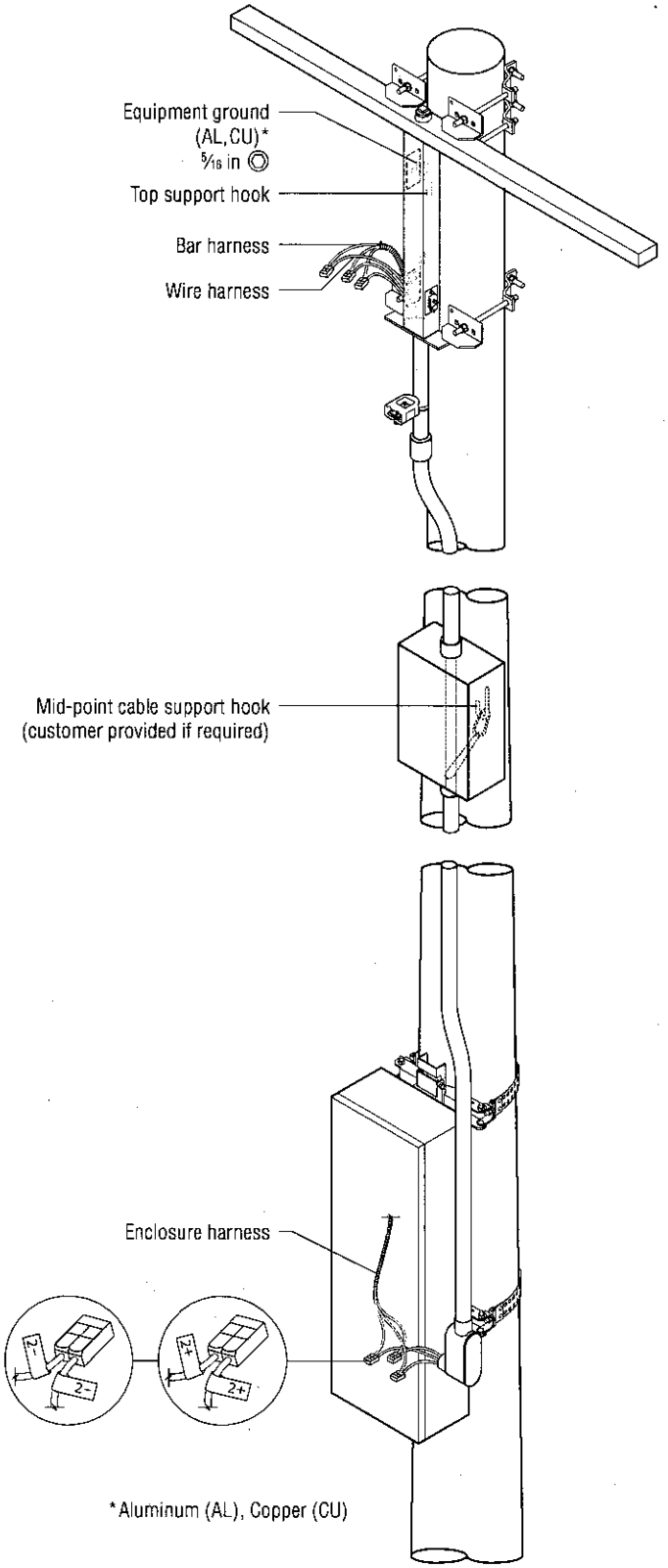


©2015, 2017 Musco Sports Lighting, LLC · LED ECE 9 · M-1933-en04-5

## Wiring

**10** Using 7/16 in wrench connect bonding jumper from equipment ground bar in electrical components enclosure to mounting plate.

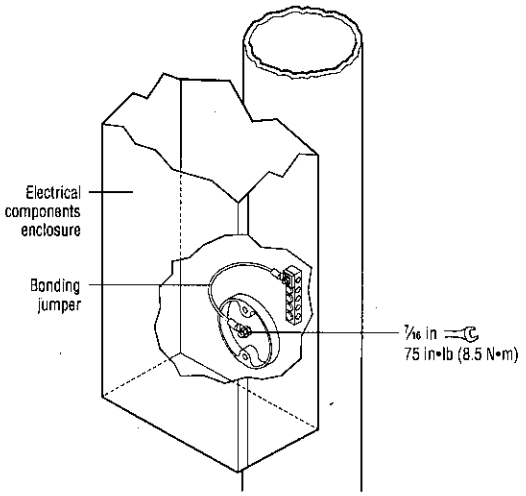


**11** Connect equipment ground wire to ground bar inside electrical components enclosure.

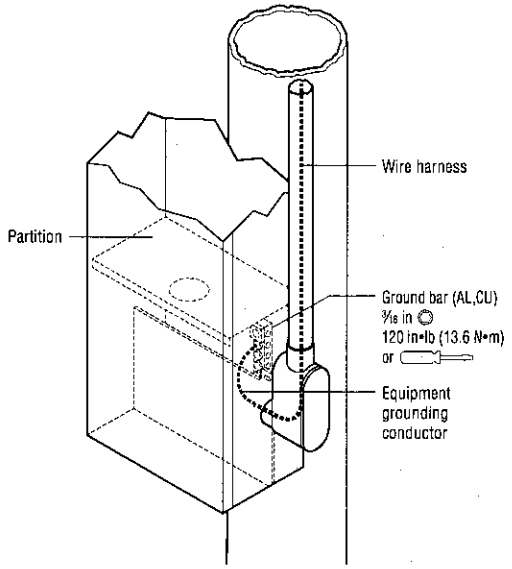


Musco *Control System Summary* or *Field Aiming Diagram* provides electrical loading information needed to size wire and switchgear. Musco provides instructions for installing Control-Link™ control system or lighting contactor cabinet when these items are part of your project.

**12** Pull supply wiring into enclosure below partition. Poles with multiple circuits have multiple disconnect switches, generally in separate enclosures.

**13** Land equipment grounding conductor from supply on ground bar.

**14** Connect equipment grounding conductors (green/yellow) from each upper enclosure to equipment ground bar in bottom enclosure. If pole has multiple stacks, connect bonding jumper from stack with circuit disconnect. Tighten lugs using 3/16 in hex key.

**15** Land supply wires on disconnect switch, and land neutral wire on distribution lugs.

Disconnect is rated for copper wire only. Contact Musco for adaptor or use UL-listed adaptor for aluminum wire.

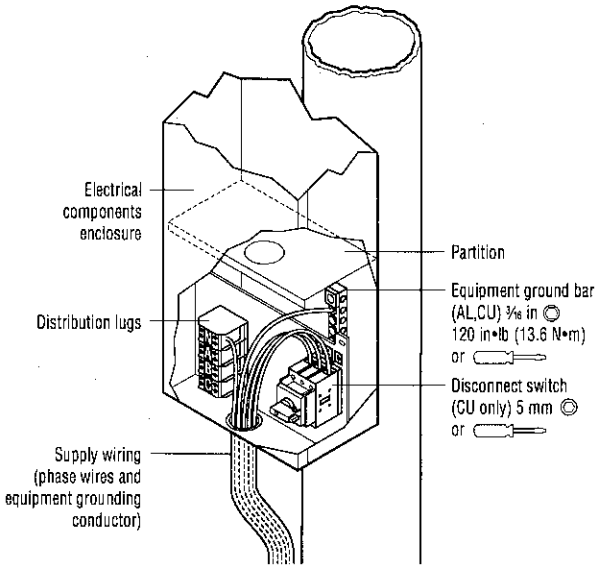


©2015, 2017 Musco Sports Lighting, LLC · LED ECE 9 · M-1933-en04-5

# Lightning Ground

## Overview

Proper pole grounding is important to protect people and property from the hazards of lightning. This installation instruction is based on the recommendations found in NFPA 780 for lightning protection. Check local and other applicable codes for any additional requirements.

### Tools/Materials Needed

Musco Supplied

- ❑ 5/16 in hex key
- ❑ ½ in wrench
- ❑ 3/16 in hex key

Contractor Supplied

- ❑ Shovel
- ❑ ⅝ in (16 mm) copper clad steel grounding electrode 8 ft (2.5 m) long, one per pole
- ❑ Grounding electrode conductor, see table
- ❑ Saddle clamp (rated for wire)
- ❑ Copper-to-aluminum connector (if required)
- ❑ Exothermic fusion-welding kit
- ❑ Bonding jumper

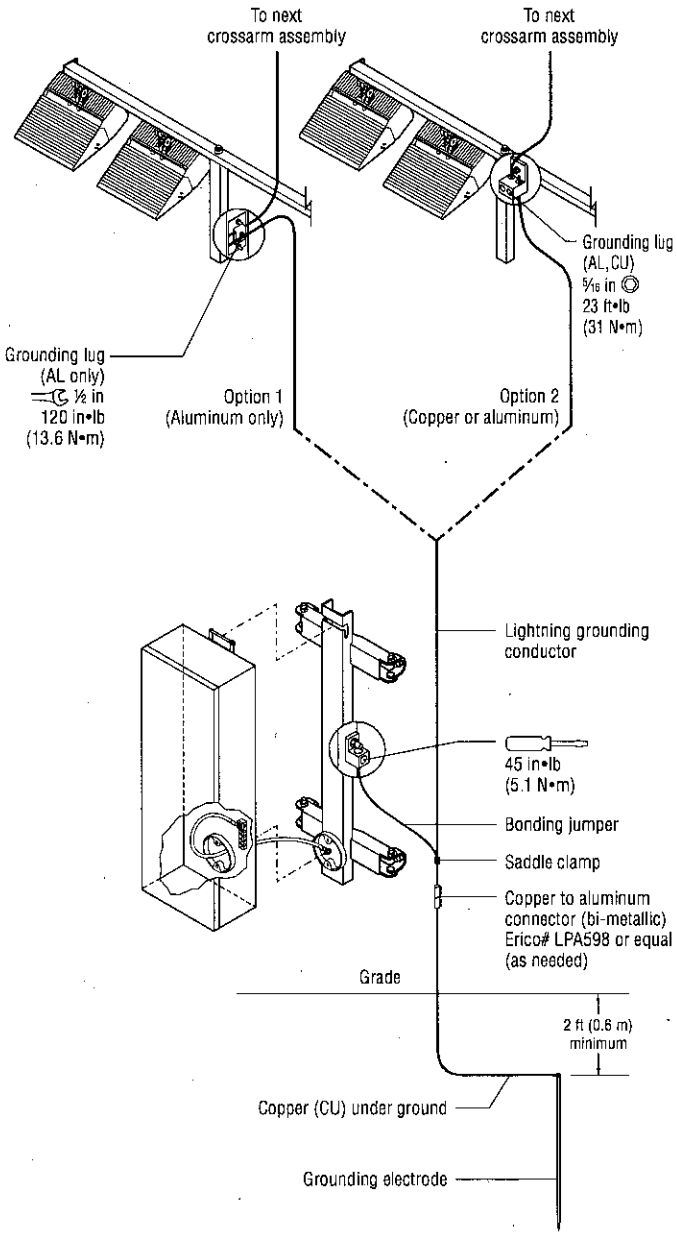


## Installation Procedure

**1** Excavate location near pole to depth of at least 2 ft (0.6 m). Drive grounding electrode into ground. In case of shallow bedrock or obstruction, you may drive electrode at 45° or shallower angle.

Use driving sleeve to prevent deforming end of electrode. Trim any deformed portion for proper exothermic fusion-welding.

**2** Install lightning grounding conductor from poletop to grounding electrode. Support per code. Attach to grounding lug on each crossarm assembly. When routing below grade, do not allow conductor to dip below top of grounding electrode.

### Lightning Grounding Conductor

Attach to external lightning grounding lug (rated for aluminum only) or to internal lightning grounding lug (dual-rated).

| Mounting Height | Bare Stranded Aluminum* | Bare Stranded Copper |
|---|---|---|
| Up to 75 ft (23 m) | 1/0 AWG (cross-sectional area of 53.5 mm²) | 2 AWG (cross-sectional area of 33.6 mm²) |
| Over 75 ft (23 m) | 4/0 AWG (cross-sectional area of 107.2 mm²) | 2/0 AWG (cross-sectional area of 67.4 mm²) |

* Copper grounding conductor required for underground connection to grounding electrode. Use properly rated AL to CU connector.

©2015, 2017 Musco Sports Lighting, LLC · LED ECE 9 · M-1933-en04-5

## Lightning Ground

**3** Bond conductor to electrode using exothermic fusion-welding kit with ignitor and brush. Follow instructions inside kit.

**4** Route bonding jumper from hanger bracket grounding lug to lightning grounding conductor. Attach with saddle clamp.

**5** Backfill excavated area around grounding electrode.

*Note: Regularly inspect and maintain lightning ground in accordance with applicable laws and regulations.*

©2015, 2017 Musco Sports Lighting, LLC · LED ECE 9 · M-1933-en04-5

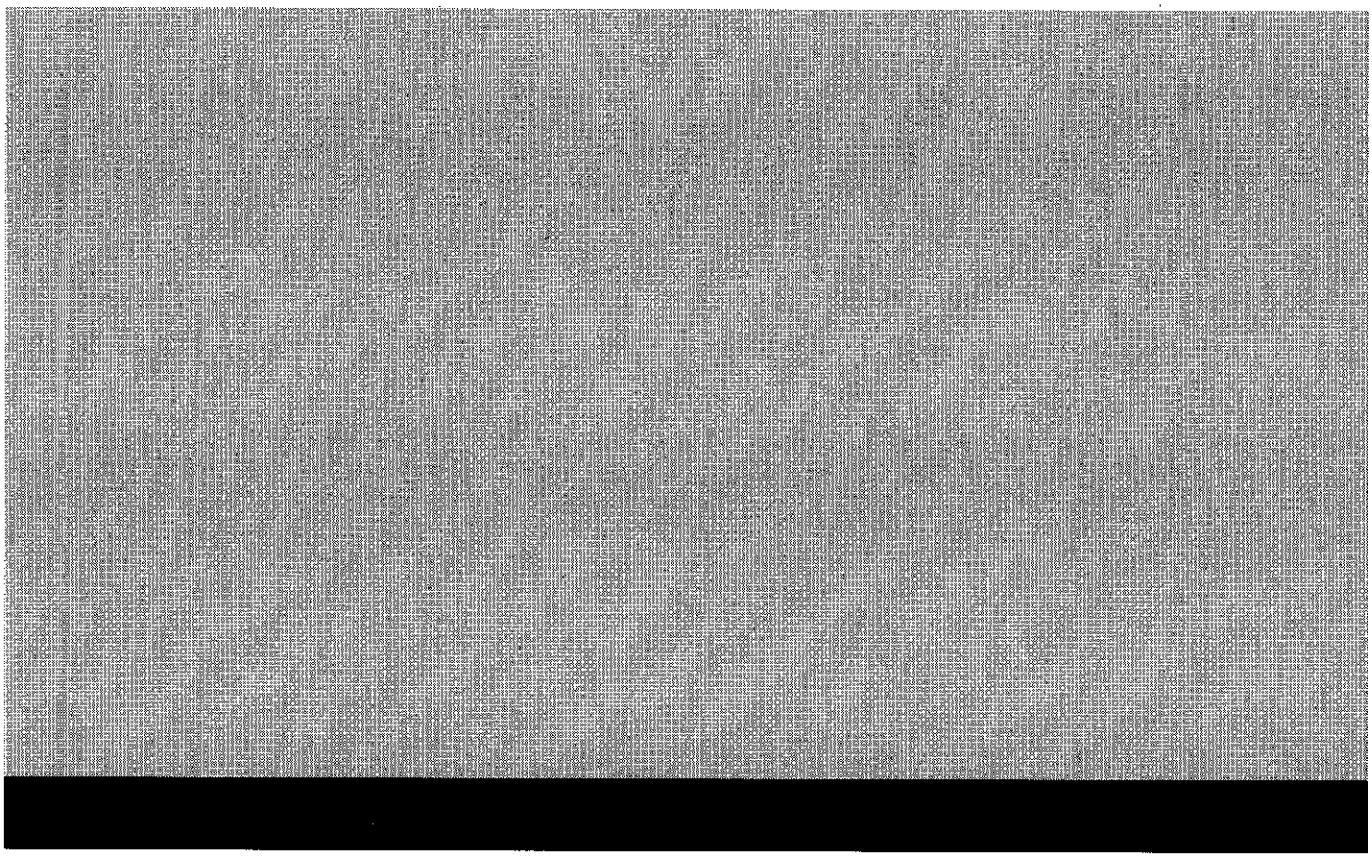

We Make It Happen.

www.musco.com

Musco SportsCluster® product referenced or shown may be protected by one or more of the following patents. United States Patent(s): D695949, D695952, D734532, D771854, 7956551, 7956556, 8300219, 8508152, 8575866, 8789967, 9066401, 9435517. Canada Patent(s): 158610, 158611. China Patent for Design 中国外观设计专利: ZL201330222107.7, ZL201330222318.0, ZL201430388788.9, ZL201430388828.X. European Union: 3461409. Germany Patent(s): 402014002112. Republic of Korea Patent(s): 10-1577571, 10-1661263, 30-0776415, 30-0819161, 30-0829782, 30-0837174. United Kingdom Patent(s): 4036147, 6002845. U.S. and foreign patents pending. [Pat_059D]

©2015, 2017 Musco Sports Lighting, LLC · LED ECE 9 · M-1933-en04-5

# Installation Instructions: **Control-Link® Control and Monitoring System**

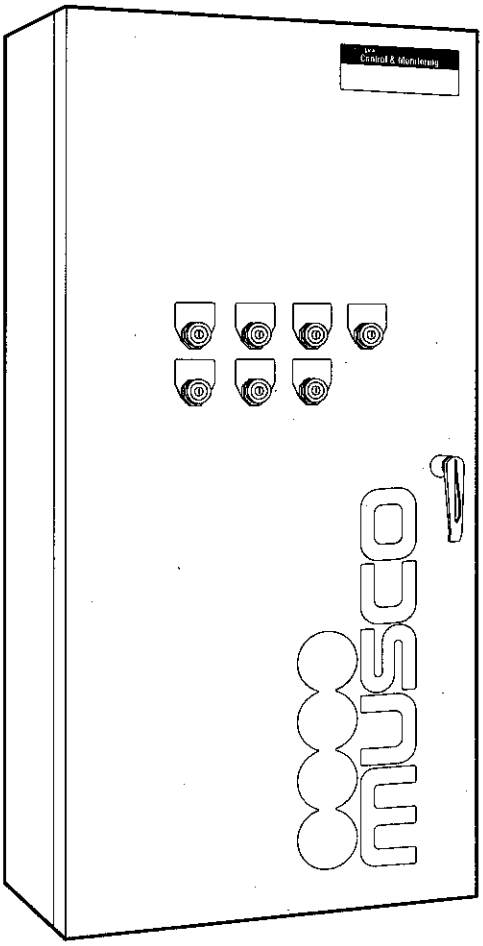


**We Make It Happen.**

©2019 Musco Sports Lighting, LLC · M-3076-en04-1

## Contents

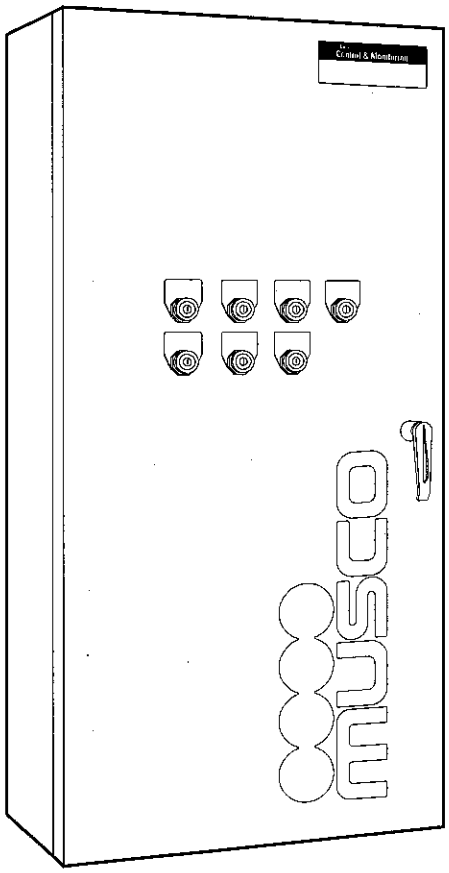


Before You Begin ..... 3
Safety Information ..... 3
About These Instructions ..... 3
Electrical System Requirements ..... 4
Cabinet Dimensions ..... 5
Component Matching and Labeling ..... 5
Installation Procedure ..... 7

©2019 Musco Sports Lighting, LLC · M-3076-en04-1

# Before You Begin

## Safety Information

### Electrical Safety Guidelines

Use extreme caution near overhead power lines or underground utilities. Observe all safety precautions for high-voltage equipment. Only qualified personnel may perform wiring. Follow all applicable building and electrical codes.

### General Safety Guidelines

Follow proper safety procedures during installation. Installers must wear appropriate personal protective equipment, including eye protection.

Locate all underground utilities before digging.

All tools and equipment Musco supplies are designed for a specific use as described in these instructions. Do not use them in any other manner. Do not alter structural members in any way, such as bending, welding, or drilling, without prior authorization from Musco.

## About These Instructions

These instructions detail basic installation procedures for the Control-Link® Control and Monitoring System. They are not a comprehensive guide to all possible situations. Direct any questions to Musco at +1-800-825-6020 or call your local representative.

Throughout this manual, note these important symbols:

The safety alert symbol alerts you of situations that require care and caution to avoid serious personal injury.

The stop and check symbol signals you to stop and verify conditions before proceeding.

The contact Musco symbol appears in special situations where you may need to call Musco for further information.

The go-to arrow tells you where to find further instructions for special situations or optional features.

The tip symbol points out advice that makes installation easier.

The recycle symbol identifies recyclable materials.

©2019 Musco Sports Lighting, LLC · M-3076-en04-1

# Before You Begin

## Electrical System Requirements

Only a qualified electrician may perform electrical work. Follow all applicable code requirements. Ensure your electrician reviews the following information before beginning installation.

- Ensure supply wiring is rated for 90 °C.
- Size circuit breakers for full load amperage draw of each circuit. Refer to cabinet interior door label for short circuit current rating information.
- A transformer may be required to supply control power. See *Control Power Consumption* table in *Control System Summary*.
- The control system requires power at all times for manual lighting control, scheduling, monitoring, and communication with Musco's Control-Link Central™ service center. Only switch off power for maintenance. Supply a breaker lock-on device.

### Control System Summary

Musco supplies a *Control System Summary* for every project. This document is necessary for system design and pre-installation planning. It contains project-specific details you need for installation. Here are the contents:

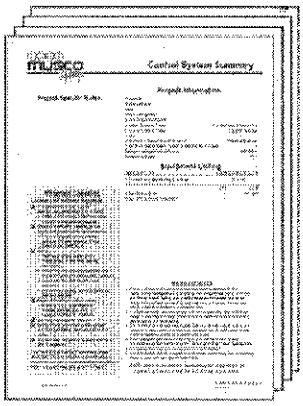

- Project information
  - Project details
  - Contact information
  - References to documents such as lighting design scan
  - Voltage, frequency, and phase
  - Control voltage
- Materials checklist
  - A quick reference of everything you supply for the project
- Equipment listing
  - Cabinets
  - Contactors and sizes
  - Switches
- Important installation notes
- Control system diagram
  - Cabinet layout
  - Wire runs and conduit details
- Switching schedule
  - Fields and lighting zones
- Control power consumption
  - Control voltage and phase requirements
  - Volt-amp loading of control system
- Driver specifications
  - Luminaire current by voltage
  - Driver power factor
- Circuit summary by zone
  - Switching zone details (pole, number of luminaires, field, contactor ID, zone)
  - Full load current draw for each circuit
- Panel summary
  - Panel layout by circuit
  - Service Control module location for each circuit/ contactor
- Zone schedule
  - Field/circuit grouping by zone/selector switch

©2019 Musco Sports Lighting, LLC · M-3076-en04-1

# Before You Begin

## Cabinet Dimensions

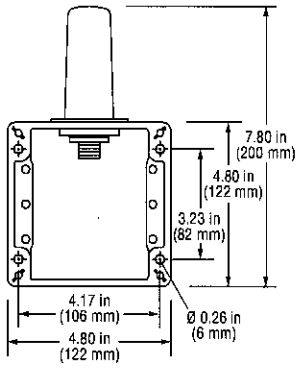


Wireless communication enclosure

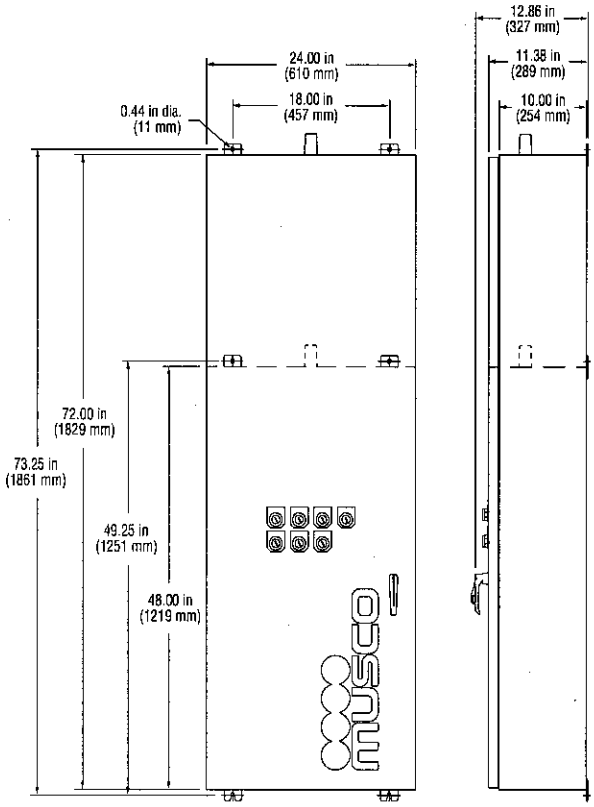


Control cabinet
48 in (1219 mm) or 72 in (1829 mm)

Notes:
- Manual switches shown may differ on your equipment
- Shorter cabinet defined by dashed out

## Component Matching and Labeling

Musco labels all equipment to make installation easy. Components, cabinets, wiring, and connectors are all clearly marked with location, function, or any information needed for proper installation.

### Electrical Components Labeling

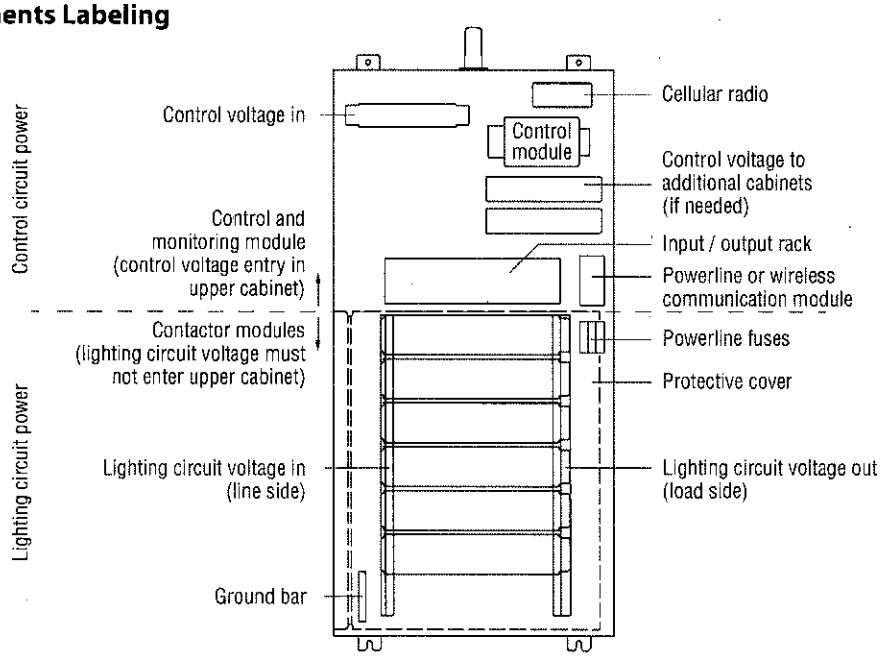


Control and monitoring cabinet (48 inch shown)

©2019 Musco Sports Lighting, LLC · M-3076-en04-1

# Before You Begin

### Wire and Connector Labeling

All cabinets are factory wired. Musco provides plug-in connectors to run harnesses between cabinets. The connectors are clearly labeled for easy installation.

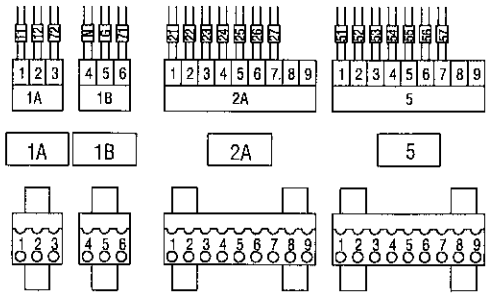


### Location Stenciling

Each enclosure is custom fabricated for a specific location in your facility. To ensure installation at the correct location, we stencil the top of each cabinet with the facility name and electrical service.

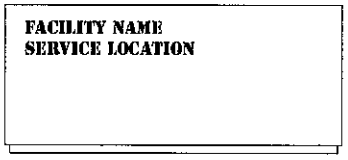


Top view of cabinet

### Cabinet Labeling

A label in the upper right corner of the door identifies each cabinet. This label gives the control module ID and cabinet sequence. For example: 01-1 (first control module, first cabinet), 01-2 (first control module, second cabinet). See *Control System Summary* for a complete list of all supplied equipment.

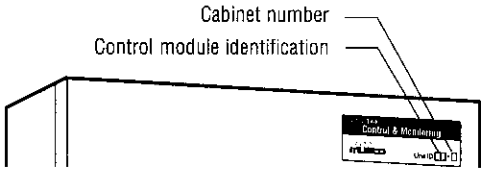


©2019 Musco Sports Lighting, LLC · M-3076-en04-1

## Installation Procedure

**Warning**
**Shock hazard**

Disconnect power from distribution panel before opening. Take measures to ensure power remains disconnected until all installation steps are completed.

Installation steps vary by control system configuration. Consult your *Control System Summary* to determine your configuration before continuing.

Refer to *Control System Summary* for specific conduit runs and wire sizing needed in your project.

1. Mount cabinets in desired locations.

*Note: If you are installing optional manual switches cabinet, you may locate it up to 300 ft away (75 m with 2.5 mm² wire) but not farther.*

2. Cut entryways. Run conduit and wireway as needed for all cabinets and lighting circuits.

3. Install dedicated 20 amp circuit breaker in distribution panel to supply control circuit power. Install transformer if needed. See *Control System Summary* for information on breaker and transformer sizing.

4. Install lock-on device to control power circuit breaker. Apply provided label *Leave Breaker On Unless Performing Maintenance* to panel beside breaker.

5. Run control circuit power wires to contactor control cabinet. Land on terminals provided (L1, N, G).

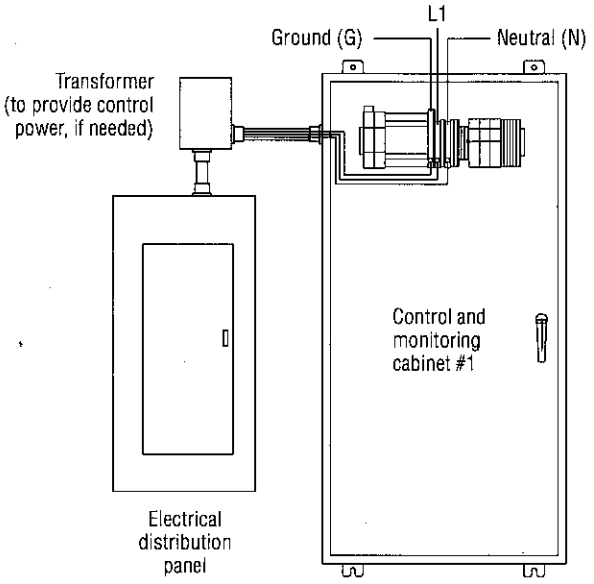

## Installation Procedure

**6** Connect factory-supplied control harnesses as needed between cabinets. Route wires through conduit and plug connectors into matching sockets as labeled.

*Note: Musco supplies control harnesses in standard lengths of 8 ft (2.4 m). If needed, disconnect and rebuild with longer wire: 12 AWG (2.5 mm²). The table gives wire and connector identification for reference.*

Important: If combined length of all harnesses exceeds 30 ft (9 m), then subsequent cabinets need additional surge protection. Contact Musco for assistance.

*Example: Cabinet 1 to 2 is 20 ft (6 m), cabinet 2 to 3 is 20 ft (6 m), total harness length is 40 ft (12 m). Cabinet 3 needs additional surge protection device.*

### Control Harnesses

| Harness series | Wire # | Wire color | Function | Cabinet to cabinet |
|---|---|---|---|---|
| 1A | 11 | Black | Control power to switches 1 – 4 | Connector 1A, pos. 1 |
| 1A | 12 | Red | Control power to switches 5 – 8 | Connector 1A, pos. 2 |
| 1A | 72 | Brown | Filtered control power | Connector 1A, pos. 3 |
| 1B | N | White | Neutral | Connector 1B, pos. 4 |
| 1B | G | Green | Ground | Connector 1B, pos. 5 |
| 1B | 71 | Blue/white | Filtered neutral | Connector 1B, pos. 6 |
| 2A | 21-24<br>25-27 | Black<br>Red | Switched power to contactor coil | Connector 2A, pos. 1-7 |
| 5 | 51-57 | Orange | Contactor status feedback | Connector 5, pos. 1-7 |

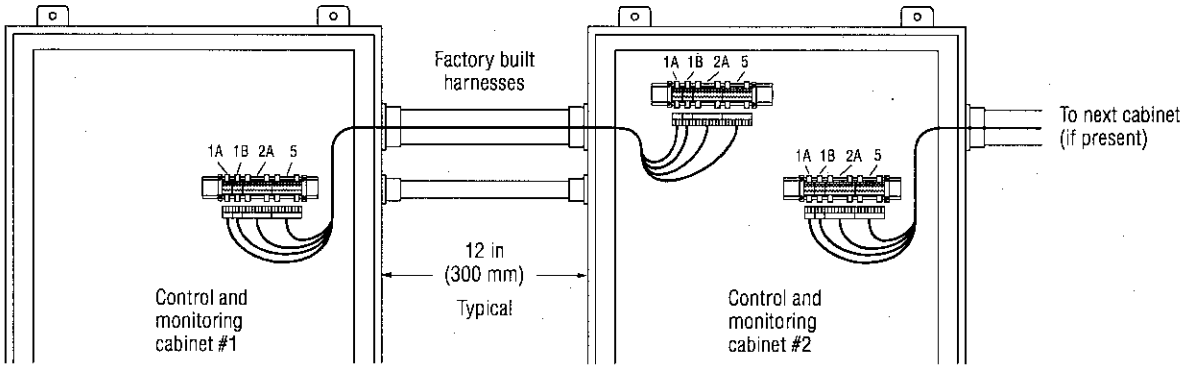


**7** Open protective cover over contactors using 8 mm hex key. Connect all control and monitoring lighting contactor cabinets to system ground in distribution panel. Do not chain grounding conductors from cabinet to cabinet. See table *Ground Bar Wire Range and Torque* for torque requirements.

*Note: Reliable operation of surge protection equipment requires home run of ground wires to minimize resistance from additional connections. Grounding conductors must be insulated.*

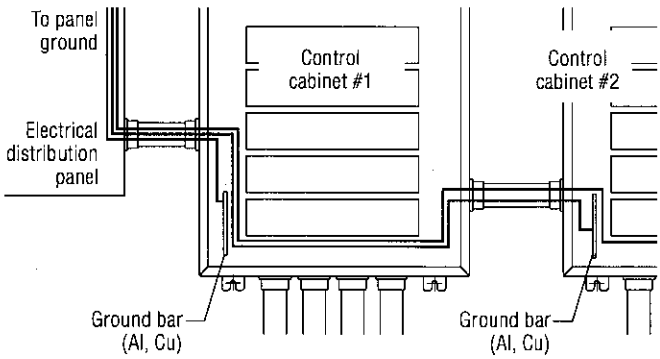


### Ground Bar Wire Range and Torque

| Wire range | Torque |
|---|---|
| 6 – 4 AWG (16 mm²) | 35 in·lb (4.0 N·m) |
| 14 – 10 AWG (2.5 – 10 mm²) 2 wire | 25 in·lb (2.8 N·m) |
| 14 – 10 AWG (2.5 – 10 mm²) 1 wire | 20 in·lb (2.3 N·m) |

©2019 Musco Sports Lighting, LLC · M-3076-en04-1

## Installation Procedure

If your project includes wireless communication to electrical components enclosures, skip to step 11.

**8** Install dedicated 20 amp circuit breaker in distribution to connect powerline communication.

**9** Install lock-on device to powerline communication circuit breaker. Apply provided label. *Leave breaker on unless performing maintenance* to panel beside breaker.

**10** Run powerline communication circuit (lighting circuit voltage) to control and monitoring cabinet. Land all available phases on fuses provided. Torque: 18 in·lb (2 N·m)

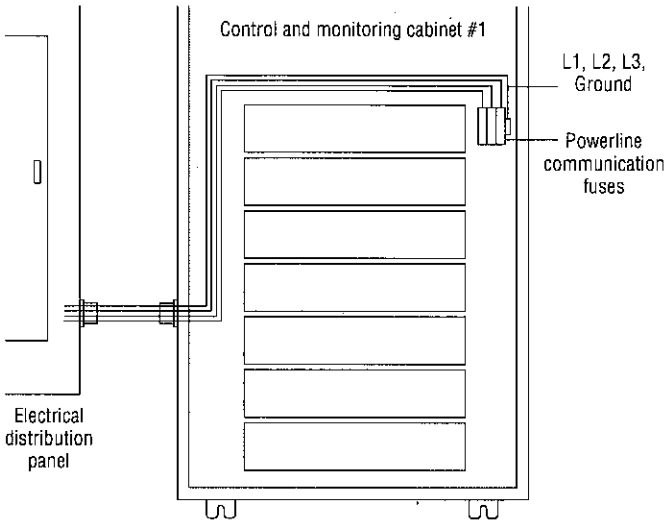


**11** Connect lighting circuit equipment grounding conductors to ground bar in control cabinet. See table *Ground Bar Wire Range and Torque* for torque requirements. Equipment grounding conductors must be insulated and all connection points must be insulated and waterproof.

**12** Connect lighting circuits to load side of contactor modules. See table *Contactor Module Wire Range and Torque* for torque requirements.

**13** Connect power from electrical distribution panel to lighting contactor modules. See table *Contactor Module Wire Range* and Torque for torque requirements. Close and secure protective cover.

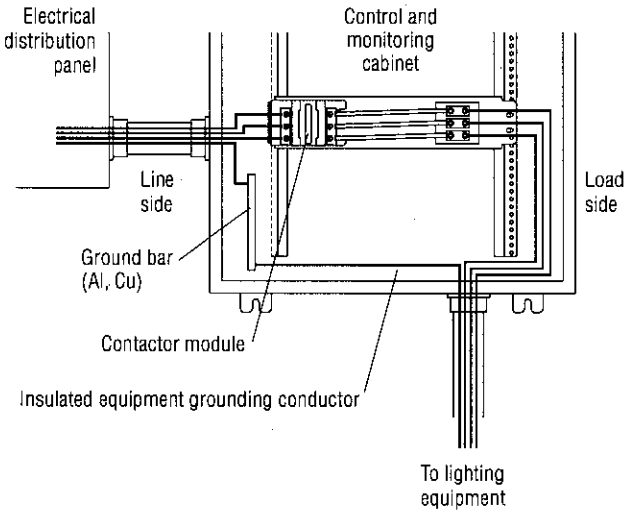


### Contactor Module Wire Range and Torque

| Contactor rating | Line side<br>Wire size range*<br>Rated Cu only | Torque | Load side<br>Wire size range**<br>Rated Al, Cu | Torque |
|---|---|---|---|---|
| **30 amp [LC1D40]** | 10 – 3 AWG (6 – 25 mm²) | 45 in·lb (5 N·m) | 14 – 10 AWG (2.5 – 6 mm²) | 35 in·lb (4 N·m) |
| | | | 8 AWG (10 mm²) | 40 in·lb (4.5 N·m) |
| | | | 6 – 2/0 AWG (16 – 50 mm²) | 120 in·lb (13.5 N·m) |
| **60 amp [LC1D80]** | 10 – 2 AWG (6 – 25 mm²) | 100 in·lb (11 N·m) | 14 – 10 AWG (2.5 – 6 mm²) | 35 in·lb (4 N·m) |
| | | | 8 AWG (10 mm²) | 40 in·lb (4.5 N·m) |
| | | | 6 – 2/0 AWG (16 – 50 mm²) | 120 in·lb (13.5 N·m) |
| **100 amp [LC1D115]** | 14 – 2/0 AWG (2.5 – 50 mm²) | 100 in·lb (11 N·m) | 6 AWG – 350 MCM (16 – 150 mm²) | 275 in·lb (31 N·m) |
| | | | 6 AWG – 350 MCM (16 – 150 mm²) Neutral block only | 375 in·lb (42 N·m) |

* Stranded cable, single conductor, copper only.

** Stranded cable, single conductor, copper or aluminum.

©2019 Musco Sports Lighting, LLC · M-3076-en04-1

## Installation Procedure

If your project includes optional manual switches cabinet, follow provided instructions for installation, then proceed to step 17.

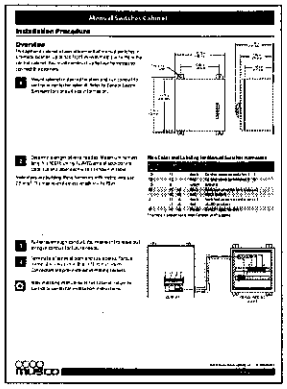

If your project utilizes powerline communication, skip to step 15.

**14** Mount wireless communication antenna cabinet in desired location. Antenna must have line-of-sight to antenna mounted on light poles. To avoid interference, antenna must be at least 3 ft (0.91 m) above control and monitoring cabinet and a minimum of 7 ft (2.1 m) away, total distance.

If control and monitoring cabinet Control-Link system antenna is remote mounted, adjust wireless communication antenna location to maintain minimum distances.

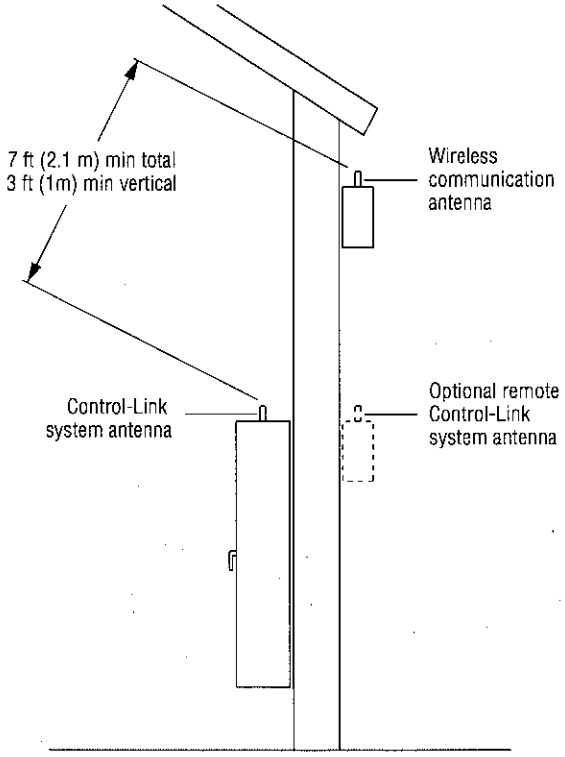


©2019 Musco Sports Lighting, LLC · M-3076-en04-1

## Installation Procedure

**15** Cut entryways. Run conduit and wireway as needed.

**16** Pull and install supplied coaxial cable on remote antenna to wireless radio in control and monitoring cabinet.

Do not coil excess coax cable inside control and monitoring cabinet as this can cause signal interference.

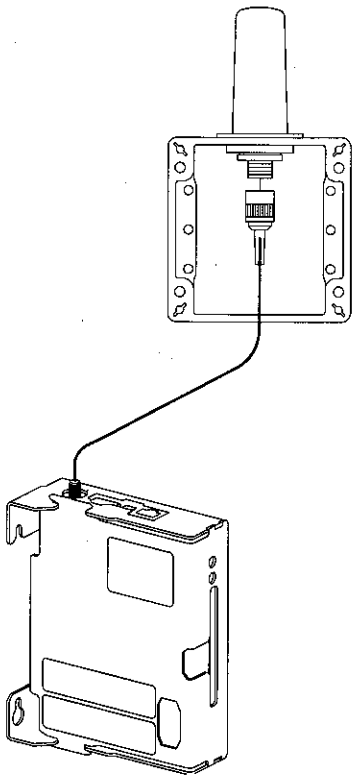

**17** After all circuits are completed, test entire lighting system.

- Turn off all manual switches.
- Turn on control system power.
- Turn on manual switches to test each circuit.
- Verify contactor pulls in and lights illuminate.

Call Musco Control-Link Central™ service center at +1-877-347-3319 two weeks prior to anticipated project completion to schedule commissioning time.

**18** Commission the lighting system. Set all manual switches to auto position and call Musco Control-Link Central service center at the scheduled date and time.

Commissioning is the process required to bring the remote control system on-line. It takes approximately one to two hours. The electrical installer must be present for assistance and trouble-shooting. During this process, the service center operator:

- Establishes wireless communication
- Remotely switches each circuit and checks status
- Verifies with you each circuit is operating as expected
- Operates all circuits and luminaires approximately 3 minutes to establish baseline readings for system monitoring

©2019 Musco Sports Lighting, LLC · M-3076-en04-1

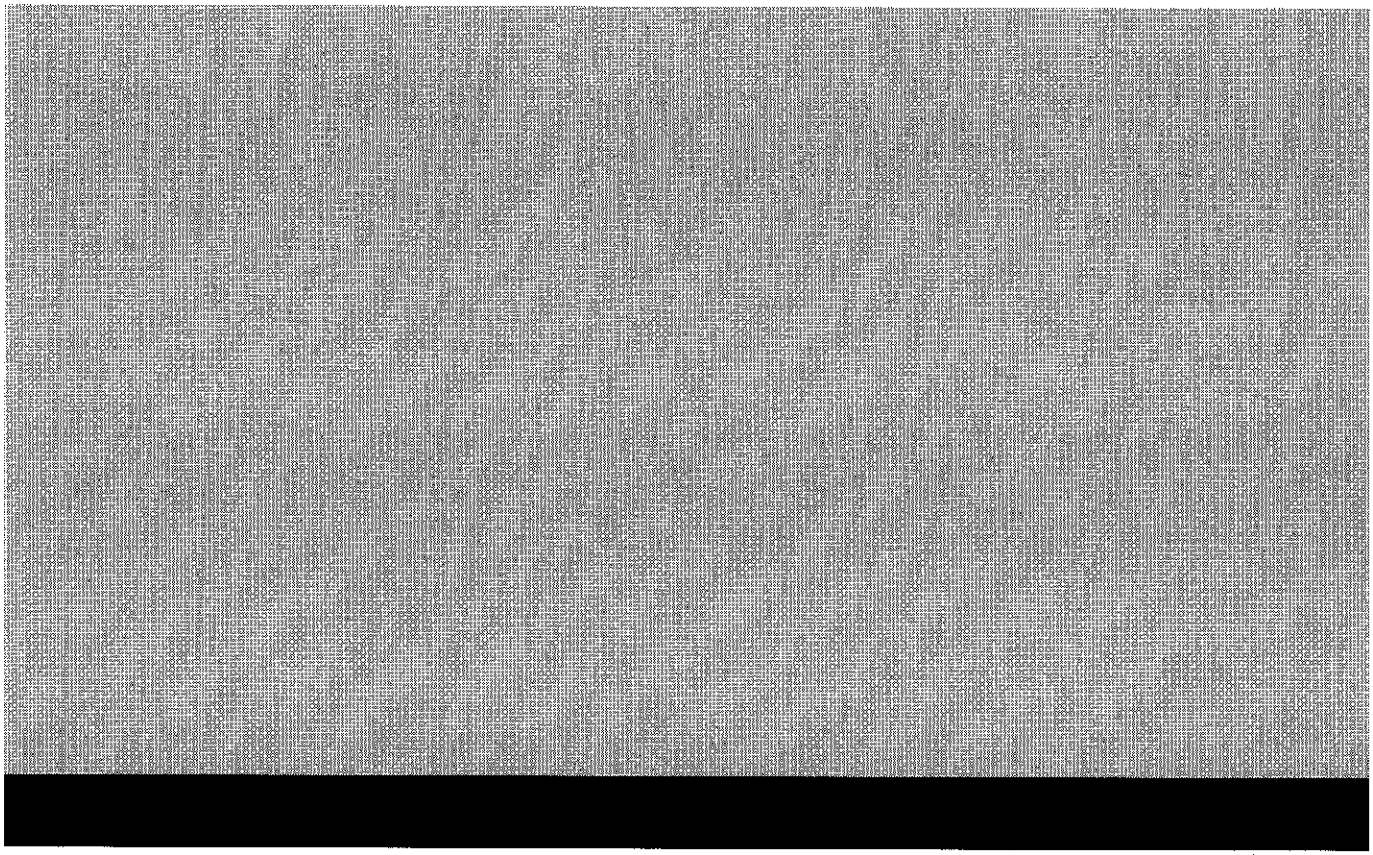

**We Make It Happen.**

**www.musco.com**

United States Patents: 7209958, 7778635, 9026104. [Pat_0408] Control-Link® is a registered trademark of Musco Corporation in the US. Control-Link Central™ is a trademark of Musco Corporation.

©2019 Musco Sports Lighting, LLC · M-3076-en04-1

# Installation Instructions: **External Lightning Grounding**

## Overview

Proper pole grounding is important to protect people and property from the hazards of lightning. Some Light-Structure Green™ installations require external grounding either in place of, or in addition to the integral grounding system in the precast concrete base. This installation instruction is based on the recommendations found in NFPA 780 for lightning protection. Check local and other applicable codes for any additional requirements.

### Tools/Materials Needed

Musco Supplied

- ❑ Grounding electrode 10 ft (3 m)
- ❑ Grounding electrode conductor
- ❑ Exothermic fusion-welding kit
- ❑ Ignitor
- ❑ Wire brush

Contractor Supplied

- ❑ 5/32 inch hex key
- ❑ Torque wrench with 5/16 inch hex bit

## Installation Procedure

**1** Drive grounding electrode into ground near pole. Ensure top end of electrode is at least 2 feet (0.6 m) below final grade. In case of shallow bedrock or obstruction you may drive electrode at 45° or shallower angle.

Use a driving sleeve to prevent deforming the end of the electrode. Trim any deformed portion for proper exothermic fusion-welding.

**2** Open handholes on steel pole and concrete base using 5/32 inch hex key.

**3** Route grounding electrode conductor from handhole in steel pole, through concrete base, to grounding electrode. Cut off excess at electrode.

*Note: For painted poles, route conductor from top of pole to electrode. Bond conductor at each pole section.*

**4** Bond grounding electrode conductor to lug inside handhole. Torque to 23 ft•lb (31 N•m) using torque wrench with 5/16 inch hex bit.

**5** Bond conductor to electrode using provided exothermic fusion-welding kit with ignitor and brush. Follow instructions inside kit.

**6** Replace handhole covers and backfill excavated area around concrete base.

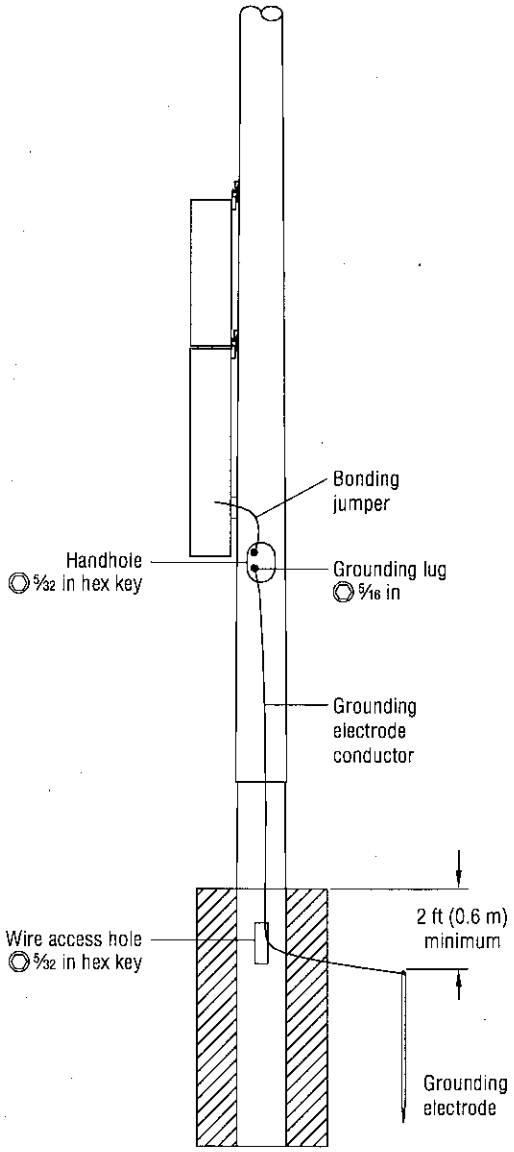


©2012 Musco Sports Lighting, LLC · I-2010-1



END OF EXHIBIT B – SCOPE OF WORK

# EXHIBIT C - GENERAL CONDITIONS (9 pages)

## ARTICLE 1. DEFINITIONS

Whenever in these Specifications, or in any document of instructions where these Specifications govern, the following terms or pronouns in place of them are used, the intent and meaning will be interpreted as follows:

Bid: The offer of the Bidder for the work when properly made out on forms containing the Bid for Lump Sum Construction supplied by COUNTY and properly submitted, signed and guaranteed.

Bid Documents: All Drawings, Technical Specifications, Supplementary General and/or General Conditions, Bid Schedule, Construction Contract and Bonds, and Contract Documents.

Bidder: Any individual, firm or corporation, qualified as herein provided, legally submitting a Bid for the work contemplated, acting directly or through an authorized representative.

Board: The Board of Supervisors, Pima County, Arizona, acting under authority of the laws of Arizona.

Building Code: The directions, provisions, and requirements contained in the current edition of the Building Codes, with Amendments, as adopted by Pima County, supplemented by such special provisions as may be necessary, pertaining to the method and manner of performing the work, quality and quantity of material to be furnished and measurement for payment of same.

Contract: The written Agreement between COUNTY and CONTRACTOR covering the performance of the work and the furnishing of labor, equipment, and materials in the construction of the work.

Contract Bond: The approved form of security furnished by CONTRACTOR and its Surety as a guarantee on the part of CONTRACTOR to execute the work in accordance with the terms of the Contract.

CONTRACTOR: The party who undertakes to execute the work, acting directly or through an authorized lawful agent or employee.

COUNTY: Pima County, Arizona, a body politic and corporate, the owner of the work.

Department: The Pima County Capital Program Office.

Director: The Pima County Department Director, an assistant or other representative duly authorized by a Department Director to act on their behalf.

Extra Work: Work, including materials, for which no price agreement is contained in the Contract and which is deemed necessary for the proper completion of the work.

Item: A detail of work for which separate payment is made.

Laboratory: The established laboratory of the Department or other laboratories authorized by COUNTY to test materials and work involved in the Contract.

Plans: The Contract drawings or exact representations thereof, which show the location, character, dimensions, and details of the work.

Project Manager, Engineer, or Architect: The person designated by COUNTY to oversee the project on its behalf.

Standard Specifications: The directions, provisions, and requirements contained in the current edition of the PAG Standard Specifications for Public Improvements 2015 Edition with Amendments, as adopted by Pima County, supplemented by such special provisions as may be necessary, pertaining to the method and manner of performing the work, quality and quantity of material to be furnished and measurement of payment of same.

Supplementary Agreement: A written agreement executed by CONTRACTOR and COUNTY covering alterations to the project. A change order or a force account work request prepared on the approved form of the Department is a supplementary agreement.

Supplementary General Conditions or Special Conditions: The Supplementary General Conditions or Special Conditions are additional to the General Conditions, which are conditions or requirements peculiar to the project under consideration.

Surety: The corporate body which is bound with and for CONTRACTOR, who is primarily liable, and which (agrees) to be responsible for its payment of all debts pertaining to and for its acceptable performance of the work for which it has contracted.

The Work: All of the work specified in the Contract.

**ARTICLE 2. RESPONSIBILITY REGARDING EXISTING UTILITIES AND STRUCTURES**

COUNTY does not guarantee the existence and locations of underground utilities indicated on the plans and CONTRACTOR will investigate and verify the location of underground utilities in the field before starting work. CONTRACTOR will carefully perform excavations in the vicinity of existing structures and utilities. CONTRACTOR is responsible for any damage to, and for maintenance and protection of, existing utilities and structures. At least two full working days prior to commencing excavation, contactor must call blue Stake Center, 1-800-STAKE-IT, between the hours of 7:00 a.m. and 4:30 p.m., Monday through Friday for information relative to the location of buried utilities.

CONTRACTOR is fully responsible for costs incurred due to damage to utilities as a result of grading or excavation operations. Utility locations shown on the Plans are approximate, and not all utilities may be shown. The possibility of conflicts with existing utilities –in-place exists. If conflicting utilities interfere with CONTRACTOR'S normal progress toward completion of this project, COUNTY may, at is option, authorize CONTRACTOR to relocate said conflicting utilities by Force Account.

It is the responsibility of CONTRACTOR to contact the utility companies in order for them to determine if there is a need for any bracing or shoring of power to telephone poles during the construction of this project. If bracing or shoring is necessary, CONTRACTOR will effect this work to the satisfaction of the utility company. COUNTY will make no measurement or direct payment for bracing or shoring.

**ARTICLE 3. LEGAL RELATIONS AND RESPONSIBILITY TO THE PUBLIC**

a. Laws to be Observed -- CONTRACTOR is presumed to be familiar with and at all times will observe and comply with all Federal and State laws and local ordinances, worker's compensation, occupational disease, and unemployment compensation laws together with the payment of all premiums and taxes therefor, also all laws, ordinances, and regulations in any manner affecting the conduct of the work and will indemnify and hold harmless COUNTY and its representatives against any claim arising from the violations of such laws, bylaws, ordinances or regulations, whether by CONTRACTOR or by CONTRACTOR'S employees.

b. Permits and Licenses -- CONTRACTOR will procure all County building permits, and sewer connection fees. CONTRACTOR will post required permits on site and give all notices necessary and incidental to the due and lawful prosecution of the work. CONTRACTOR will procure and pay for all other permits, fees, and applications for water, gas, electric and other utilities.

c. Sanitary Provisions -- CONTRACTOR will provide and maintain in a neat and sanitary condition such accommodations for the use of its employees as may be necessary to comply with the requirements and regulations of the Arizona Department of Health Services or other authorities having jurisdiction therein.

d. Public Convenience and Safety -- CONTRACTOR will have due regard for the public health and will conduct the work in such a manner as to provide and insure the safety and convenience of the public.

   When special conditions prevail and extraordinary measures are necessary, the details will be set forth in the Technical Specifications or Special Provisions.

e. Barricades, Warning Lights, and Detour Signs -- CONTRACTOR will at its expense and without further order provide, erect, and maintain at all times during the progress or temporary suspension of the work such

barricades, fences, warning lights, danger signals, reflectors, signs, or other protective devices as are required to insure the safety of the public, those engaged in connection with the work and the work itself.

Unless otherwise expressly stated in the Contract, no measurement or direct payment for this work will be made, but the cost of providing, erecting, and maintaining such protection devices, including guards, watchmen and/or flagmen as required will be considered as included and paid for in the contract prices for the work.

f. Use of Explosives -- Prohibited

g. Preservation and Restoration of Property -- CONTRACTOR will be responsible for the preservation of all public and private property on the surface or underground, along and adjacent to the work and will conduct its operations so as to insure the prevention of injury or damage thereto. No land monuments or property will be disturbed or moved until an authorized agent has witnessed or otherwise referenced their locations.

When or where any direct or indirect damage or injury is done to public or private property by or on account of any act, omission, neglect, or misconduct in the execution of the work, or in consequence or the non-execution thereof on the part of CONTRACTOR, CONTRACTOR will restore such property at its own expense to a condition similar or equal to that existing before such damage or injury was done, by repairing, rebuilding, or otherwise restoring same, or it will make good such damage or injury in an acceptable manner.

h. CONTRACTOR'S Responsibility for Work -- Until written final acceptance of the work by COUNTY, CONTRACTOR will have the charge and care thereof and will take every precaution against injury or damage to any part thereof by action of elements, or from any other cause, whether arising from the execution or non-execution of the work. The CONTRACTOR will rebuild, repair, restore, and make good all injuries or damages of any portion of the work occasioned by any of the above causes before final acceptance and will bear the expense thereof.

In case of the suspension of work for any cause whatever, CONTRACTOR will be responsible for all work and materials and will take proper care of the work, storing all materials if necessary, and will provide suitable drainage of the work and erect necessary temporary structures.

i. Waiver of Legal Rights -- COUNTY will not be precluded or be estopped, by any measurement, estimate, or certificate made either before or after the completion and acceptance of the work and payment therefor, from showing the true amount and character of the work performed and materials furnished by CONTRACTOR, or from showing that any such measurement, estimate, or certificate is untrue or incorrectly made, or that the work or materials do not conform in fact to the Contract. Neither the acceptance by COUNTY or by any representative of COUNTY nor any payment, nor acceptance of the whole or any part of the work, nor any extension of time, nor any possession taken by COUNTY will operate as a waiver of any portion of the Contract or of any power herein reserved, or any right to damage herein provided. A waiver of any breach of the Contract is not a waiver of any other subsequent breach.

**ARTICLE 4. ACCIDENTS**

CONTRACTOR will provide, at the site, such equipment and medical facilities as are necessary to supply first-aid service to anyone who may be injured in connection with the work.

CONTRACTOR must promptly report in writing to COUNTY all accidents whatsoever arising out of, or in connection with the performance of the work, whether on or adjacent to the site, which caused death, personal injury, or property damage, giving full details and statements of witnesses. In addition, if death or serious injuries or serious damages are caused, CONTRACTOR will report the accident immediately by telephone or messenger to both COUNTY and the Board.

If any claim is made by anyone against CONTRACTOR or any Subcontractor on account of any accident, CONTRACTOR will promptly report the facts in writing to COUNTY, giving full details of the claim.

**ARTICLE 5. RESERVED**

**ARTICLE 6. RESERVED**

## ARTICLE 7. EXECUTION, CORRELATION AND INTENT OF DOCUMENTS

The Contract documents are complementary, and what is called for by any one will be as binding as if called for by all, and the most stringent requirement will apply. The intention of the documents is to include all labor and materials, equipment and transportation necessary for the proper execution of the work. It is not intended, however, that materials or work not covered by or properly inferable from any heading, branch, class or trade of the specifications will be supplied unless distinctly so noted on the drawings. Materials or work described in words that so applied have a well-known technical or trade meaning will be held to refer to such recognized standards.

## ARTICLE 8. DETAIL DRAWINGS AND INSTRUCTIONS

COUNTY will furnish with reasonable promptness, additional instructions, by means of drawings or otherwise, necessary for the proper execution of the work. All such drawings and instructions will be consistent with the Bid documents, true developments thereof, and reasonably inferable therefrom.

## ARTICLE 9. COPIES OF DRAWINGS FURNISHED

COUNTY will provide, at no cost to CONTRACTOR, two complete sets of code approved construction documents in non-reproducible form.

COUNTY will provide, at no cost to CONTRACTOR, five (5) non-reproducible sets of construction documents used during the course of bidding the work (Bid Sets) for execution on the work. It will be CONTRACTOR'S responsibility to ensure that any modifications called for as a result of the permit process are transferred to the bid sets.

CONTRACTOR may purchase additional sets of code-approved sets or bid sets construction documents, at its expense.

## ARTICLE 10. ORDER OF COMPLETION

CONTRACTOR will submit at such times as may be requested by COUNTY, schedules which will show the order in which CONTRACTOR proposes to carry on the work with dates at which CONTRACTOR will start the several parts of the work and estimated dates of completion of the several parts.

## ARTICLE 11. CONSTRUCTION DOCUMENTS ON THE JOB SITE

CONTRACTOR will keep one copy of code approved construction documents on the job site, in good order, available to COUNTY and to COUNTY'S representatives. This set of documents will be kept current as to pending and approved changes in the work.

## ARTICLE 12. OWNERSHIP OF DRAWINGS

All drawings, specifications, and copies thereof furnished by COUNTY are the property of Pima County. They are not to be used on other work and with the exception of the signed Contract set, and are to be returned to COUNTY on request, at the completion of the work. All models are the property of COUNTY.

## ARTICLE 13. CONTRACTOR'S UNDERSTANDING

CONTRACTOR has, by careful examination, satisfied itself as to the nature and location of the work, the conformation of the ground, the character of equipment and facilities needed preliminary to and during the prosecution of the work, the general and local conditions, and all other matters which can in any way affect the work under this Contract. No verbal agreement or conversations with any officer, agent or employee of COUNTY, either before or after the execution of this Contract, will affect or modify any of the terms or obligations herein contained.

## ARTICLE 14. MATERIALS, APPLIANCES, EMPLOYEES

Unless otherwise agreed, CONTRACTOR will provide and pay for all materials, labor, water, tools, equipment, light, power, transportation, and other facilities necessary for the execution and completion of the work.

Unless otherwise agreed, all materials will be new, and both workmanship and materials will be of good quality. CONTRACTOR will, if required, furnish satisfactory evidence as to the kind and quality of materials.

CONTRACTOR will at all times enforce strict discipline and good order among its employees, and will not employ on the work any unfit person or anyone not skilled in the work that CONTRACTOR assigns to that person.

**ARTICLE 15. ROYALTIES AND PATENTS**

CONTRACTOR will pay all royalties and license fees. CONTRACTOR will defend all suits or claims for infringement of any patent rights and will hold COUNTY harmless from loss on account thereof, except that COUNTY will be responsible for all such loss when a particular process or the product of a particular manufacturer or manufacturers is specified, but if CONTRACTOR has information that the process or article specified is an infringement of a patent it will be responsible for such loss unless it promptly gives such information to COUNTY.

**ARTICLE 16. SURVEYS, PERMITS, AND REGULATIONS**

COUNTY will furnish all property surveys unless otherwise specified. CONTRACTOR will secure and pay for permits and licenses of a temporary nature necessary for the prosecution of the work except as noted in Article 3.b. COUNTY will secure and pay for easements for permanent structures or permanent changes in existing facilities unless otherwise agreed.

CONTRACTOR will give all notices and comply with all laws, ordinances, rules, and regulations bearing on the conduct of the work as drawn and specified. If CONTRACTOR observes that the drawings and specifications are at variance therewith, it will promptly notify COUNTY in writing, and any necessary changes will be adjusted as provided in the Contract for changes in the work. If CONTRACTOR performs any work knowing it to be contrary to such laws, ordinances, rules, and regulations, and without such notice to COUNTY, it will bear all costs arising therefrom.

**ARTICLE 17. PROTECTION OF WORK AND PROPERTY**

CONTRACTOR will continuously maintain adequate protection of all its work from damage and will protect COUNTY'S property from injury or loss arising in connection with this Contract. It will make good any such damage, injury, or loss, except such as may be directly due to errors in the bid documents or caused by agents or employees of COUNTY. It will adequately protect adjacent property as provided by law and the bid documents. It will provide and maintain all passageways, guard fences, lights, and other facilities for protection required by public authority or local conditions.

If an emergency should occur affecting the safety of life or the work or of adjoining property, CONTRACTOR, without special instruction or authorization from COUNTY, is hereby permitted to act at his discretion, to prevent such threatened loss or injury, and CONTRACTOR will so act, without appeal, if so instructed or authorized. Any compensation claimed by CONTRACTOR on account of emergency work will be determined by COUNTY.

CONTRACTOR is responsible for equipment, materials, and supplies until completion of the project and acceptance by COUNTY.

**ARTICLE 18. INSPECTION OF WORK**

COUNTY representatives will at all times have access to the work wherever it is in preparation or progress and CONTRACTOR will provide proper facilities for such access and for inspection.

If the specifications, COUNTY'S instructions, laws, ordinances, or any public authority, require any work to be specially tested or approved, CONTRACTOR will give COUNTY timely notice of its readiness for inspection and if the inspection is by an authority other than COUNTY, of the date fixed for such inspection. Inspections by COUNTY will be promptly made, and where practicable at the source of supply. If any work should be covered up without approval or consent of COUNTY, it must, if required by COUNTY, be uncovered for examination at CONTRACTOR'S expense.

Re-examination of questioned work may be ordered by COUNTY and if so ordered the work must be uncovered by CONTRACTOR. If such work is found to be in accordance with the bid documents, COUNTY will pay the cost of re-examination and replacement. If such work is found not to be in accordance with the bid documents, CONTRACTOR will pay such cost.

**ARTICLE 19. SUPERINTENDENCE - SUPERVISION**

CONTRACTOR will keep on its work site during its progress a competent Superintendent and any necessary assistants, all satisfactory to COUNTY. The Superintendent will not be changed except with the consent of COUNTY, unless the Superintendent proves to be unsatisfactory to CONTRACTOR and ceases to be in its employ. The Superintendent will represent CONTRACTOR in its absence and all directions given to it will be as binding as if given to CONTRACTOR. CONTRACTOR will give efficient supervision to the work using its best skill and attention.

If CONTRACTOR, in the course of the work, finds any discrepancy between the construction documents and the physical conditions of the locality, or any errors or omissions in the construction documents or in the layout as given by points and instructions, it will be its duty to immediately inform COUNTY, in writing, and COUNTY will promptly verify the same. Any work done after such discovery, until authorized, will be done at CONTRACTOR's risk.

Neither COUNTY nor CONTRACTOR, will employ an employee of the other without consent.

**ARTICLE 20. RESERVED**

**ARTICLE 21. CLAIMS FOR EXTRA COST FOR ADDITIONAL WORK**

If CONTRACTOR claims that any additional instructions by drawings or otherwise involve extra cost under this Contract, it will give COUNTY written notice thereof within a reasonable time after the receipt of such instructions, and in any event before proceeding to execute the work, except in an emergency endangering life or property. No such claim will be valid unless so made.

**ARTICLE 22. DEDUCTIONS FOR UNCORRECTED WORK**

If COUNTY deems it not expedient to correct work injured or done not in accordance with the Contract, an equitable deduction from the Contract price will be made therefor.

CONTRACTOR will promptly remove from the premises all materials condemned by COUNTY as failing to conform to the Contract, whether incorporated in the work or not, and CONTRACTOR will promptly replace and re-execute its own work in accordance with the Contract and without expense to COUNTY and will bear the expense of making good all work of other contractors destroyed or damaged by such removal or replacement.

If CONTRACTOR does not remove such condemned work and materials within a reasonable time, fixed by written notice, COUNTY may remove them and may store the material at the expense of CONTRACTOR. If CONTRACTOR does not pay the expense of such removal within ten days' time thereafter, COUNTY may, upon ten days written notice, sell such materials at auction or at private sale and will account for the net proceeds thereof, after deducting all the costs and expenses that should have been borne by CONTRACTOR.

**ARTICLE 23. SUSPENSION OF WORK**

COUNTY may at any time suspend the work, or any part thereof by giving three (3) days' notice to CONTRACTOR in writing. When the reason for such suspension involves safety, health or welfare issues, the three (3) day written notice requirement may be waived at the decision of the COUNTY Management. CONTRACTOR will resume the work within ten (10) days after the date fixed in the written notice from COUNTY to CONTRACTOR to do so.

**ARTICLE 24. COUNTY'S RIGHT TO DO WORK**

If CONTRACTOR neglects to prosecute the work properly or fails to perform any provision of this Contract, COUNTY may, after three (3) days written notice to the CONTRACTOR, without prejudice to any other remedy it may have, make good such deficiencies and may deduct the cost thereof from the payment then or thereafter due CONTRACTOR.

**ARTICLE 25. COUNTY'S RIGHT TO TERMINATE CONTRACT**

If CONTRACTOR persistently or repeatedly refuses or fails, except in cases for which extension of time is provided, to supply enough properly skilled workers or proper materials, or if it fails to make prompt payment to subcontractors for material or labor, or persistently disregards laws, ordinances, or the instructions of COUNTY, or otherwise is guilty of a substantial violation of any provision of the contract, then COUNTY may, without prejudice to any other right or

remedy and after giving CONTRACTOR ten (10) days written notice, terminate the employment of CONTRACTOR and take possession of the premises and of all materials, tools, and appliances thereon and finish the work by whatever method COUNTY may deem expedient. In such case CONTRACTOR will not be entitled to receive any further payment until the work is finished. If the unpaid balance of the Contract price will exceed the expense of finishing the work, including compensation for additional managerial and administrative service, such excess will be paid to CONTRACTOR. If such expense will exceed such unpaid balance, CONTRACTOR will pay the difference to COUNTY. COUNTY will certify the expense incurred by COUNTY as herein provided, and the damage incurred through the CONTRACTOR'S default.

**ARTICLE 26. REMOVAL OF EQUIPMENT**

In any case of annulment or termination of this Contract before completion from any cause whatever, CONTRACTOR, if notified to do so by COUNTY, will promptly remove any part or all of its equipment and supplies from the property of COUNTY, failing which COUNTY will have the right to remove such equipment and supplies at the expense of CONTRACTOR.

**ARTICLE 27. USE OF COMPLETED PORTIONS**

COUNTY has the right to take possession of and use any completed or partially completed portions of the work, notwithstanding the time for completing the entire work or such portions may not have expired, but such taking possession and use is not an acceptance of any work not completed in accordance with the Bid documents. If such prior use increases the cost of or delays the work, CONTRACTOR will be entitled to such extra compensation, or extension of time, or both, as COUNTY may determine.

**ARTICLE 28. PAYMENTS WITHHELD**

COUNTY may decline to certify payment or, because of discovered evidence or observations, may nullify the whole or any part of any certificate for payment previously issued, to such extent as may be necessary in its opinion to protect COUNTY from loss because of:

a. Defective work not remedied.
b. Third party claims filed or reasonable evidence indicating probable filing of such claims.
c. Failure of CONTRACTOR to make payments properly to Subcontractors or for labor, materials, or equipment.
d. Reasonable evidence that the work cannot be completed for the unpaid balance of the Contract sum.
e. Damage to another CONTRACTOR.

When the above grounds are removed, payment will be made for amounts withheld because of them.

**ARTICLE 29. WARRANTY**

CONTRACTOR will provide a written guarantee covering all costs for repair or replacement of defective work for a period of two (2) years (or longer if noted elsewhere in the construction documents) from substantial completion. CONTRACTOR will complete repair, or respond to COUNTY in writing with repair solution, within seventy-two (72) hours of notification by COUNTY. COUNTY may make emergency repairs to ensure life safety or to prevent property loss, without invalidating the warranty.

**ARTICLE 30. LIENS**

Neither the final payment nor any part of the retained percentage will become due until CONTRACTOR delivers to COUNTY a complete release of all liens arising out of this Contract, or receipts in full or in lieu thereof, and if required in either case, an affidavit that so far as it has knowledge or information, the release and receipts include all the labor for which a lien could be filed; but CONTRACTOR may, if any subcontractor refuses to furnish a release or receipt in full, furnish a bond satisfactory to COUNTY, to indemnify COUNTY against any lien. If any lien remains unsatisfied after all payments are made, CONTRACTOR will pay to COUNTY all monies that COUNTY may be compelled to pay in discharging such a lien, including all costs and a reasonable attorney's fee.

## ARTICLE 31. RIGHTS OF VARIOUS INTERESTS

Wherever work being done by COUNTY'S forces or other contractors is contiguous to work covered by this Contract

the respective rights of the various interests involved will be established by the COUNTY to secure the completion of the various portions of the work in general harmony.

## ARTICLE 32. SEPARATE CONTRACTS

COUNTY reserves the right to let other contracts in connection with this work. CONTRACTOR will afford other contractors reasonable opportunity for the introduction and storage of their materials and the execution of their work, and will properly connect and coordinate its work with theirs.

If any part of CONTRACTOR'S work depends upon proper execution or results of the work of any other contractor, CONTRACTOR will inspect and its report will constitute an acceptance of the other contractor's work after the execution of its work.

To insure the proper execution of its subsequent work, CONTRACTOR will measure work already in place and will once report to COUNTY any discrepancy between the executed work and the drawings.

## ARTICLE 33. COUNTY'S STATUS

The COUNTY has general review of the work and has the authority to reject all work and materials that do not conform to the Contract.

## ARTICLE 34. CLAIMS AND DISPUTES

All claims, demands, disputes, controversies, and differences that arise between the parties hereto as result of or in connection with this Contract will be referred to COUNTY in writing with a request for review and response in accordance with this paragraph, which COUNTY will render in writing within a reasonable time.

CONTRACTOR will deliver written notice of each such claim, demand, dispute, controversy or difference to COUNTY within fifteen (15) days of the occurrence of the event giving rise thereto and written supporting data will be submitted to COUNTY within forty-five (45) days of such occurrence unless COUNTY specifies a different period of time in writing to CONTRACTOR. The submission to COUNTY with respect to any such claim, demand, dispute, controversy or difference will be a condition precedent to any exercise by CONTRACTOR of such rights or remedies as CONTRACTOR may otherwise have under the Bid documents or at law in respect of any such claim, demand, dispute, controversy or difference.

If either COUNTY or CONTRACTOR is dissatisfied with any decision of COUNTY and both parties agree in writing, then the dispute may be settled by arbitration in accordance with the Construction Industry Arbitration Rules of the American Arbitration Association, and judgment upon the award rendered by the arbitrator(s) will be entered in any court having jurisdiction thereof. All arbitration hearings must be held in Tucson, Arizona.

## ARTICLE 35. CLEANING UP

CONTRACTOR will, as directed by COUNTY, remove from COUNTY'S property and from all public and private property, at its own expense, all temporary structures, rubbish, and waste materials resulting from its operation.

## ARTICLE 36. RESERVED

## ARTICLE 37. ARCHAEOLOGICAL FEATURES

Construction for this project may occur in an archaeological sensitive area. The County Office of Conservation and Sustainability Cultural Resources Division will determine prior to construction (other than emergencies) any special site monitoring requirements. Human burials, including human skeletal remains, cremations, and funerary objects are protected under A.R.S. section 41-844 on state, county, and municipal lands, and under A.R.S. section 41-865 on private lands. Should archaeological features and/or artifacts or human remains, including human skeletal or cremation remains be discovered, work at that location will cease immediately, and the area will be taped off and avoided until archaeological investigations are completed. Construction is subject to delay in that location pursuant

to applicable State law, while consultation with the Arizona State Museum and appropriate documentation and data recovery takes place. To the extent permitted by law, all archaeological artifacts and other materials will belong to Pima County. No monetary compensation will be made to CONTRACTOR for any claims due to delays in the work schedule. Only the Contract construction time will be extended to permit the original scheduled number of days for completion of the project.

**ARTICLE 38. RESERVED**

**ARTICLE 39. RESERVED**

**ARTICLE 40. HAZARDOUS MATERIALS/ HAZARDOUS WASTES / HAZARDOUS SUBSTANCES ABATEMENT**

Should CONTRACTOR uncover, or otherwise become aware of the presence of any Hazardous Materials, Hazardous Wastes or Hazardous Substances during the construction of this project, notice will be served immediately to the COUNTY Project Manager, and all work surrounding said materials or substances will be ceased until directed to proceed. Construction delays due to Hazardous Materials, Hazardous Wastes or Hazardous Substances abatement may occur.

If this Contract does not otherwise require the services of a Hazardous Materials contractor, abatement of such materials will be provided by Pima County, at its expense and independent of this Contract.

If this Contract already employs the services of a Hazardous Materials contractor, the cost to abate any such additional materials will be added to the contract as Additional Services, in accordance with the provisions of Article 21 "Claims for Cost of Additional Work".

**ARTICLE 41. WASTE DISPOSAL FACILITIES**

CONTRACTOR will legally dispose of all construction debris in appropriate County operated waste disposal facilities and pay any applicable fees. In the case of conflicts with the provisions of the Contract Specifications, this provision applies.

**ARTICLE 42. AS-BUILT DRAWINGS**

CONTRACTOR will keep an accurate record of all changes and deviations from the Project Plans and Specifications and submit to COUNTY one set of "As-Built" drawings including dimension, location of underground utilities, etc., upon completion of the work. As-Built drawings will be drawn and submitted in such a format as prescribed by COUNTY.

**ARTICLE 43. RESERVED**

**ARTICLE 44. BUILDER'S RISK**

CONTRACTOR will be responsible for equipment, materials, and supplies until completion of the project and acceptance by COUNTY.

**END OF EXHIBIT C - GENERAL CONDITIONS**

GREETAN-01 JARNETT

# CERTIFICATE OF LIABILITY INSURANCE

DATE (MM/DD/YYYY) 10/5/2021

THIS CERTIFICATE IS ISSUED AS A MATTER OF INFORMATION ONLY AND CONFERS NO RIGHTS UPON THE CERTIFICATE HOLDER. THIS CERTIFICATE DOES NOT AFFIRMATIVELY OR NEGATIVELY AMEND, EXTEND OR ALTER THE COVERAGE AFFORDED BY THE POLICIES BELOW. THIS CERTIFICATE OF INSURANCE DOES NOT CONSTITUTE A CONTRACT BETWEEN THE ISSUING INSURER(S), AUTHORIZED REPRESENTATIVE OR PRODUCER, AND THE CERTIFICATE HOLDER.

IMPORTANT: If the certificate holder is an ADDITIONAL INSURED, the policy(ies) must have ADDITIONAL INSURED provisions or be endorsed. If SUBROGATION IS WAIVED, subject to the terms and conditions of the policy, certain policies may require an endorsement. A statement on this certificate does not confer rights to the certificate holder in lieu of such endorsement(s).

PRODUCER
LeBaron & Carroll LLC
1350 E Southern Avenue
Mesa, AZ 85204

CONTACT NAME:
PHONE (A/C, No, Ext): (480) 834-9315 FAX (A/C, No): (480) 844-9866
E-MAIL ADDRESS: landc@lebaroncarroll.com

| INSURER(S) AFFORDING COVERAGE | NAIC # |
|---|---|
| INSURER A : Selective Insurance Company of America | 12572 |
| INSURER B : Copperpoint Indemnity Insurance Co | 13928 |
| INSURER C : Certain Und at Lloyds, London/NAIC#attached | |
| INSURER D : | |
| INSURER E : | |
| INSURER F : | |

INSURED
Green Tanner Industrial Construction LLC
1330 W Boxwood Ave
Gilbert, AZ 85233

COVERAGES CERTIFICATE NUMBER: REVISION NUMBER:

THIS IS TO CERTIFY THAT THE POLICIES OF INSURANCE LISTED BELOW HAVE BEEN ISSUED TO THE INSURED NAMED ABOVE FOR THE POLICY PERIOD INDICATED. NOTWITHSTANDING ANY REQUIREMENT, TERM OR CONDITION OF ANY CONTRACT OR OTHER DOCUMENT WITH RESPECT TO WHICH THIS CERTIFICATE MAY BE ISSUED OR MAY PERTAIN, THE INSURANCE AFFORDED BY THE POLICIES DESCRIBED HEREIN IS SUBJECT TO ALL THE TERMS, EXCLUSIONS AND CONDITIONS OF SUCH POLICIES. LIMITS SHOWN MAY HAVE BEEN REDUCED BY PAID CLAIMS.

| INSR LTR | TYPE OF INSURANCE | ADDL INSD | SUBR WVD | POLICY NUMBER | POLICY EFF (MM/DD/YYYY) | POLICY EXP (MM/DD/YYYY) | LIMITS | |
|---|---|---|---|---|---|---|---|---|
| A | X COMMERCIAL GENERAL LIABILITY<br>CLAIMS-MADE X OCCUR<br>GEN'L AGGREGATE LIMIT APPLIES PER:<br>POLICY X PRO-JECT X LOC<br>OTHER: | X | X | S 230250802 | 10/17/2020 | 10/17/2021 | EACH OCCURRENCE | $ 1,000,000 |
| | | | | | | | DAMAGE TO RENTED PREMISES (Ea occurrence) | $ 500,000 |
| | | | | | | | MED EXP (Any one person) | $ 15,000 |
| | | | | | | | PERSONAL & ADV INJURY | $ 1,000,000 |
| | | | | | | | GENERAL AGGREGATE | $ 2,000,000 |
| | | | | | | | PRODUCTS - COMP/OP AGG | $ 2,000,000 |
| | | | | | | | | $ |
| A | AUTOMOBILE LIABILITY<br>X ANY AUTO<br>OWNED AUTOS ONLY / SCHEDULED AUTOS<br>HIRED AUTOS ONLY / NON-OWNED AUTOS ONLY | X | X | S 230250802 | 10/17/2020 | 10/17/2021 | COMBINED SINGLE LIMIT (Ea accident) | $ 1,000,000 |
| | | | | | | | BODILY INJURY (Per person) | $ |
| | | | | | | | BODILY INJURY (Per accident) | $ |
| | | | | | | | PROPERTY DAMAGE (Per accident) | $ |
| | | | | | | | | $ |
| A | X UMBRELLA LIAB X OCCUR<br>EXCESS LIAB CLAIMS-MADE<br>DED X RETENTION $ 0 | | | S 230250802 | 10/17/2020 | 10/17/2021 | EACH OCCURRENCE | $ 5,000,000 |
| | | | | | | | AGGREGATE | $ 5,000,000 |
| | | | | | | | | $ |
| B | WORKERS COMPENSATION AND EMPLOYERS' LIABILITY<br>ANY PROPRIETOR/PARTNER/EXECUTIVE OFFICER/MEMBER EXCLUDED? Y / N (Mandatory in NH)<br>If yes, describe under DESCRIPTION OF OPERATIONS below | N / A | X | 1019265 | 10/17/2020 | 10/17/2021 | X PER STATUTE / OTH-ER | |
| | | | | | | | E.L. EACH ACCIDENT | $ 1,000,000 |
| | | | | | | | E.L. DISEASE - EA EMPLOYEE | $ 1,000,000 |
| | | | | | | | E.L. DISEASE - POLICY LIMIT | $ 1,000,000 |
| C | Prof Liab/Pollution | | | MR201128 | 10/17/2020 | 10/17/2021 | Each Claim/Aggregate | 1,000,000 |
| A | Installation Floater | | | S 230250802 | 10/17/2020 | 10/17/2021 | in transit $50,000; | 500,000 |

DESCRIPTION OF OPERATIONS / LOCATIONS / VEHICLES (ACORD 101, Additional Remarks Schedule, may be attached if more space is required)
RE: Project: Mike Jacobs Sports Park LED Lighting
Umbrella limit increased to 5,000,000 effective 09/07/2021

Pima County its departments, districts, boards, commissions, officers, officials, agents, and employees are included as additional insured with respect to General Liability on a primary and non-contributory basis when required by written contract per attached forms. Auto Liability additional insured is included when required by written contract per attached forms. Waiver of subrogation applies with respect to General Liability, Auto Liability and Workers Compensation when required by written contract per attached forms. Pima County is included as loss payee with respect to the Installation Floater with
SEE ATTACHED ACORD 101

CERTIFICATE HOLDER

Pima County
150 W. Congress Street, 5th Floor
Tucson, AZ 85701

CANCELLATION

SHOULD ANY OF THE ABOVE DESCRIBED POLICIES BE CANCELLED BEFORE THE EXPIRATION DATE THEREOF, NOTICE WILL BE DELIVERED IN ACCORDANCE WITH THE POLICY PROVISIONS.

AUTHORIZED REPRESENTATIVE


© 1988-2015 ACORD CORPORATION. All rights reserved.
The ACORD name and logo are registered marks of ACORD

AGENCY CUSTOMER ID: GREETAN-01 JARNETT

LOC #: 1

# ADDITIONAL REMARKS SCHEDULE



| AGENCY | | NAMED INSURED |
|---|---|---|
| LeBaron & Carroll LLC | | Green Tanner Industrial Construction LLC<br>1330 W Boxwood Ave<br>Gilbert, AZ 85233 |
| POLICY NUMBER<br>SEE PAGE 1 | | |
| CARRIER<br>SEE PAGE 1 | NAIC CODE<br>SEE P 1 | EFFECTIVE DATE: SEE PAGE 1 |

ADDITIONAL REMARKS

THIS ADDITIONAL REMARKS FORM IS A SCHEDULE TO ACORD FORM,

FORM NUMBER: ACORD 25 FORM TITLE: Certificate of Liability Insurance

Description of Operations/Locations/Vehicles:
regards to equipment, materials, and supplies until completion of the project and acceptance by County.

Installation Floater:
Limit: 500,000
In Transit Limit: 50,000
Storage Limit: 500,000



© 2008 ACORD CORPORATION. All rights reserved.

The ACORD name and logo are registered marks of ACORD

# Contracting, Installation, Service and Repair General Liability Extended ElitePac® Endorsement

COMMERCIAL GENERAL LIABILITY
**CG 79 88 01 19**

## THIS ENDORSEMENT CHANGES THE POLICY. PLEASE READ IT CAREFULLY.

This endorsement modifies insurance provided under the following:

COMMERCIAL GENERAL LIABILITY COVERAGE PART

With respect to coverage provided by this endorsement, the provisions of the Coverage Form apply unless modified by the endorsement.

**1. BLANKET ADDITIONAL INSUREDS**

**a. Ongoing Operations**

**SECTION II — WHO IS AN INSURED** is amended to include as an additional insured:

**1.** Any person or organization for whom you are performing operations when you and such person or organization have agreed in a written contract, written agreement or written permit that such person or organization be added as an additional insured on your commercial general liability policy; and

**2.** Any other person or organization, including any architects, engineers or surveyors not engaged by you, whom you are required to add as an additional insured under your policy in the contract or agreement in Paragraph **1.** above;

Such person or organization is an additional insured only with respect to liability arising out of your ongoing operations performed under that contract, agreement, or permit when that contract, agreement, or permit requires the additional insured be added with respect to liability arising out of your ongoing operations.

If the written contract, written agreement, or written permit does not require that the additional insured be added with respect to liability arising out of your ongoing operations, then such person or organization is an additional insured only with respect to "bodily injury", "property damage" or "personal and advertising injury" caused in whole or in part by your ongoing operations performed under that contract, agreement, or permit.

**b. Completed Operations**

**SECTION II — WHO IS AN INSURED** is amended to include as an additional insured:

**1.** Any person or organization for whom you are performing or have performed operations when you and such person or organization have agreed in a written contract, written agreement or written permit that such person or organization be added as an additional insured on your commercial general liability policy; and

**2.** Any other person or organization, including any architects, engineers or surveyors not engaged by you, whom you are required to add as an additional insured under your policy in the contract or agreement in Paragraph **1.** above;

Such person or organization is an additional insured only with respect to their liability arising out of "your work" performed under that contract, agreement, or permit and included in the "products-completed operations hazard" when that contract, agreement, or permit requires the additional insured be added with respect to liability arising out of "your work" performed under that contract, agreement, or permit and included in the "products-completed operations hazard".

Copyright, 2018 Selective Insurance Company of America. All rights reserved.
Includes copyrighted material of Insurance Services Office, Inc., with its permission.



INSURED'S COPY

If the written contract, written agreement, or written permit does not require that the additional insured be added with respect to liability arising out of "your work" performed under that contract, agreement, or permit and included in the "products-completed operations hazard", then such person or organization is an additional insured only with respect to liability for "bodily injury", "property damage" or "personal and advertising injury" caused, in whole or in part, by "your work" performed under that contract, agreement, or permit and included in the "products-completed operations hazard".

**c.** The coverages provided in Paragraphs **a.** and **b.** do not apply unless the written contract or written agreement has been signed by the Named Insured or written permit issued prior to the "bodily injury", "property damage" or "personal and advertising injury".

**d. Exclusions**

**(1)** With respect to the insurance afforded to additional insureds under **a. Ongoing Operations** the following is added to **2. Exclusions** under **SECTION I — COVERAGE A — BODILY INJURY AND PROPERTY DAMAGE LIABILITY:**

This insurance does not apply to "bodily injury", "property damage", or "personal and advertising injury" occurring after:

**(a)** All work, including materials, parts or equipment furnished in connection with such work, on the project (other than service, maintenance or repairs) to be performed by or on behalf of the additional insured(s) at the site of the covered operations has been completed; or

**(b)** That portion of "your work" out of which the injury or damage arises has been put to its intended use by any person or organization other than another contractor or subcontractor engaged in performing operations for a principal as a part of the same project.

**(2)** With respect to the insurance afforded to these additional insureds under **a. Ongoing Operations** and **b. Completed Operations,** the following is added to **2. Exclusions** under **SECTION I — COVERAGE A — BODILY INJURY AND PROPERTY DAMAGE LIABILITY:**

This insurance does not apply to:

"Bodily injury", "property damage", or "personal and advertising injury" arising out of the rendering of, or the failure to render, any professional architectural, engineering or surveying services, including:

**(a)** The preparing, approving, or failing to prepare or approve, maps, shop drawings, opinions, reports, surveys, field orders, change orders or drawings and specifications; or

**(b)** Supervisory, inspection, architectural or engineering activities.

**e. Conditions**

With respect to the insurance afforded to these additional insureds under **a. Ongoing Operations** and **b. Completed Operations** the following is added to Paragraph **4. Other Insurance, a. Primary Insurance** under **SECTION IV — COMMERCIAL GENERAL LIABILITY CONDITIONS:**

This insurance is primary and will not contribute with any other insurance available to an additional insured under this coverage part provided that:

**(1)** The additional insured is a Named Insured under such other insurance.

**(2)** You have agreed in a written contract, written agreement or written permit to include that additional insured on your General Liability policy on a primary and/or non-contributory basis.

**2. PROPERTY DAMAGE CARE, CUSTODY OR CONTROL**

The following is added to **Exclusion j.** under **SECTION I — COVERAGE A BODILY INJURY AND PROPERTY DAMAGE LIABILITY:**

Paragraphs **(4)** and **(5)** do not apply for the limited purpose of providing the coverage and sub-limits of liability as set forth below.

We will pay those sums that the insured becomes legally obligated to pay as damages arising out of "property damage" to:

**(1)** Personal property in the care, custody or control of the insured; and

Copyright, 2018 Selective Insurance Company of America. All rights reserved.
Includes copyrighted material of Insurance Services Office, Inc., with its permission.



INSURED'S COPY

(2) That particular part of real property on which you or any contractors or subcontractors working directly or indirectly on your behalf are performing operations, if the "property damage" arises out of those operations.

The most we will pay under **(1)** and **(2)** above in any one "occurrence" or for all damages during any one policy period is a sub-limit of $100,000.

These limits are included in and not in addition to the Limits of Insurance shown in the Declarations of the Commercial General Liability Policy.

Our right and duty to defend the insured against any "suit" for damages under **(1)** and **(2)** above ends when we have used up the applicable sub-limit of liability in the payment of judgments or settlements under it.

**3. OTHER INSURANCE AMENDMENT — SUPPLEMENTAL COVERAGE FOR INSURED'S INVOLVEMENT IN A CONSOLIDATED (WRAP-UP) IN SURANCE PROGRAM OR SIMILAR PROJECT**

The following is added to **SECTION IV — COMMERCIAL GENERAL LIABILITY CONDITIONS,** Paragraph **4. Other Insurance b. Excess Insurance (1)(a):**

**(v)** That is covered by a consolidated (wrap-up) or similar insurance program provided by the prime contractor/project manager or owner of the construction project in which you are involved for your ongoing operations or operations included within the "products-completed operations hazard", unless such consolidated (wrap-up) or similar program is specifically excluded from coverage on this policy.

**4. FELLOW EMPLOYEE EXTENSION**

Under **SECTION II — WHO IS AN INSURED** Paragraphs **2.a.** and **2.a. (1)** are replaced by the following:

**a.** Your "volunteer workers" only while performing duties related to the conduct of your business, or your "employees", other than either your "executive officers" (if you are an organization other than a partnership, joint venture, or limited liability company) or your managers (if you are a limited liability company), but only for acts within the scope of their employment by you or while performing duties related to the conduct of your business. The Employers Liability exclusion **(SECTION I — COVERAGES; COVERAGE A,** exclusion **e.)** does not apply to this provision. However, none of these "employees" or "volunteer workers" are insureds for:

**(1)** "Bodily injury" or "personal and advertising injury":

**(a)** Arising out of his or her providing or failing to provide professional health care services.

**5. CONTRACTUAL LIABILITY (RAILROADS)**

**Definition 9. Insured Contract** is amended as follows:

Paragraph **c.** is deleted in its entirety and replaced with the following:

Any easement or license agreement;

Paragraph **f.(1)** is deleted in its entirety.

**6. CONTRACTUAL LIABILITY AMENDMENT — (PERSONAL AND ADVERTISING INJURY)**

If it is required in a written contract, written agreement or written permit with the insured that any contractual liability exclusion for Personal Injury be removed from the policy, then Exclusion **e. Contractual Liability** under **COVERAGE B PERSONAL AND ADVERTISING INJURY, 2. Exclusions** is deleted in its entirety and replaced with the following:

**e. Contractual Liability**

"Personal and advertising Injury" for which the insured has assumed liability in a contract or agreement arising out of an "advertisement". This exclusion does not apply to liability for damages that the insured would have in the absence of the contract or agreement"

**7. WAIVER OF GOVERNMENTAL IMMUNITY**

We will waive, both in the adjustment of claims and in the defense of "suits" against the insured, any governmental immunity of the insured, unless the insured requests in writing that we not do so.

Waiver of immunity as a defense will not subject us to liability for any portion of a claim or judgment in excess of the applicable limit of insurance.

**8. DAMAGE TO PREMISES RENTED TO YOU**

The Limit of Insurance for Damage To Premises Rented To You is increased to $1,000,000.

Copyright, 2018 Selective Insurance Company of America. All rights reserved.
Includes copyrighted material of Insurance Services Office, Inc., with its permission.



INSURED'S COPY

# CROSS LIABILITY EXCLUSION

COMMERCIAL GENERAL LIABILITY
**CG 80 44 11 14**

## THIS ENDORSEMENT CHANGES THE POLICY. PLEASE READ IT CAREFULLY.

This endorsement modifies insurance provided under the following:

COMMERCIAL GENERAL LIABILITY COVERAGE FORM

The following is added to Paragraph **2. Exclusions** under **SECTION I — COVERAGES, COVERAGE A BODILY INJURY AND PROPERTY DAMAGE LIABILITY** and **COVERAGE B PERSONAL AND ADVERTISING INJURY LIABILITY:**

This insurance does not apply to any claim or "suit" brought by any Named Insured against another Named Insured.

Copyright, 2014 Selective Insurance Company of America. All rights reserved.



INSURED'S COPY

# ElitePac®
# General Liability Extension Endorsement

COMMERCIAL GENERAL LIABILITY
**CG 73 00 01 19**

## SUMMARY OF COVERAGES (including index)

This is a summary of the various additional coverages and coverage modifications provided by this endorsement. No coverage is provided by this summary. Refer to the actual endorsement (Pages **3**-through-**9**) for changes affecting your insurance protection.


| DESCRIPTION | PAGE FOUND |
|---|---|
| Additional Insureds - Primary and Non-Contributory Provision | Page 8 |
| Blanket Additional Insureds - As Required By Contract | Page 5 |
| • Owners, Lessees or Contractors (includes Architects, Engineers or Surveyors<br>• Lessors of Leased Equipment<br>• Managers or Lessors of Premises<br>• Mortgagees, Assignees and Receivers<br>• Any Other person or organization other than a joint venture<br>• Grantors of Permits | |
| Broad Form Vendors Coverage | Page 7 |
| Damage To Premises Rented To You (Including Fire, Lightning or Explosion) | Page 3 |
| Electronic Data Liability ($100,000) | Page 4 |
| Employee Definition Amended | Page 9 |
| Employees As Insureds Modified | Page 5 |
| Employer's Liability Exclusion Amended (Not applicable in New York) | Page 3 |
| Incidental Malpractice Exclusion modified | Page 7 |
| Knowledge of Occurrence, Claim, Suit or Loss | Page 7 |
| Liberalization Clause | Page 8 |
| Mental Anguish Amendment (Not applicable to New York) | Page 9 |
| Newly Formed or Acquired Organizations | Page 5 |
| Non-Owned Aircraft | Page 3 |
| Non-Owned Watercraft (under 60 feet) | Page 3 |
| Not-for-profit Members - as additional insureds | Page 5 |
| Personal And Advertising Injury - Discrimination Amendment (Not applicable in New York) | Page 8 |
| Products Amendment (Medical Payments) | Page 4 |
| Supplementary Payments Amended - Bail Bonds ($5,000) and Loss of Earnings ($1,000) | Page 4 |
| Two or More Coverage Parts or Policies Issued By Us | Page 8 |
| Unintentional Failure to Disclose Hazards | Page 8 |
| Waiver of Transfer of Rights of Recovery (subrogation) | Page 8 |
| When Two or More Coverage Parts of this Policy Apply to a Loss | Page 3 |


Copyright, 2018 Selective Insurance Company of America. All rights reserved.
Includes copyrighted material of Insurance Services Office, Inc., with its permission.



INSURED'S COPY

# ElitePac®
# General Liability Extension Endorsement

COMMERCIAL GENERAL LIABILITY
**CG 73 00 01 19**

## THIS ENDORSEMENT CHANGES THE POLICY. PLEASE READ IT CAREFULLY.

This endorsement modifies the insurance provided under the following:

COMMERCIAL GENERAL LIABILITY COVERAGE PART

The **SECTIONS** of the Commercial General Liability Coverage Form identified in this endorsement will be amended as shown below. However, **if (a) two or more Coverage Parts of this policy, or (b) two or more forms or endorsements within the same Coverage Part apply to a loss,** coverage provision(s) with the broadest language will apply, unless specifically stated otherwise within the particular amendment covering that loss.

With respect to coverage provided by this endorsement, the provisions of the Coverage Form apply unless modified by the endorsement.

**COVERAGES - Amendments**

**SECTION I - COVERAGE A BODILY INJURY AND PROPERTY DAMAGE LIABILITY**

**EXCLUSIONS**

**Employer's Liability Amendment**

(This provision is not applicable in the State of New York).

The following is added to Exclusion **e. Employer's Liability** under **COVERAGE A BODILY INJURY AND PROPERTY DAMAGE LIABILITY, 2. Exclusions:**

This exclusion also does not apply to any "temporary worker".

**Non-Owned Aircraft, Auto or Watercraft**

**A.** Paragraph **(2)** of Exclusion **g. Aircraft, Auto Or Watercraft** under **COVERAGE A BODILY INJURY AND PROPERTY DAMAGE LIABILITY, 2. Exclusions** is deleted in its entirety and replaced with the following:

**(2)** A watercraft you do not own that is:

**(a)** Less than 26 feet long and not being used to carry persons or property for a charge; or

**(b)** At least 26 feet, but less than 60 feet long, and not being used to carry persons or property for a charge. Any person is an insured who uses or is responsible for the use of such watercraft with your expressed or implied consent. However, if the insured has any other valid and collectible insurance for "bodily injury" or "property damage" that would be covered under this provision, or on any other basis, this coverage is then excess, and subject to Condition **4. Other Insurance, b. Excess Insurance** under **SECTION IV - COMMERCIAL GENERAL LIABILITY CONDITIONS.**

**B.** The following is added to Exclusion **g. Aircraft, Auto Or Watercraft** under **COVERAGE A BODILY INJURY AND PROPERTY DAMAGE LIABILITY, 2. Exclusions:**

This exclusion does not apply to:

**(6)** Any aircraft, not owned or operated by any insured, which is hired, chartered or loaned with a paid crew. However, if the insured has any other valid and collectible insurance for "bodily injury" or "property damage" that would be covered under this provision, or on any other basis, this coverage is then excess, and subject to Condition **4. Other Insurance, b. Excess Insurance** under **SECTION IV - COMMERCIAL GENERAL LIABILITY CONDITIONS.**

**Damage To Premises Rented to You**

**A.** The last paragraph of Paragraph **2. Exclusions** under **COVERAGE A BODILY INJURY AND PROPERTY DAMAGE** is deleted in its entirety and replaced with the following:

Exclusions **c. through n.** do not apply to damage by fire, lightning or explosion to premises rented to you or temporarily occupied by you with the permission of the owner. A separate limit of insurance applies to this coverage as described in **SECTION III - LIMITS OF INSURANCE.**

Copyright, 2018 Selective Insurance Company of America. All rights reserved.
Includes copyrighted material of Insurance Services Office, Inc., with its permission.



INSURED'S COPY

**B.** Paragraph **6.** under **SECTION III - LIMITS OF INSURANCE** is deleted in its entirety and replaced with the following:

**6.** Subject to Paragraph **5.** above, the most we will pay under **COVERAGE A** for damages because of "property damage" to any one premises, while rented to you, or in the case of damage caused by fire, lightning or explosion, while rented to you or temporarily occupied by you with permission of the owner, for all such damage caused by fire, lightning or explosion proximately caused by the same event, whether such damage results from fire, lightning or explosion or any combination of the three, is the amount shown in the Declarations for the Damage To Premises Rented To You Limit.

**C.** Paragraph **a.** of Definition **9.** "Insured contract" under **SECTION V - DEFINITIONS** is deleted in its entirety and replaced with the following:

**a.** A contract for a lease of premises. However, that portion of the contract for a lease of premises that indemnifies any person or organization for damage by fire, lightning or explosion to premises while rented to you or temporarily occupied by you with the permission of the owner is not an "insured contract";

**Electronic Data Liability**

**A.** Exclusion **p. Access or Disclosure Of Confidential Or Personal Information And Data-related Liability** under **COVERAGE A BODILY INJURY AND PROPERTY DAMAGE LIABILITY, 2. Exclusions** is deleted in its entirety and replaced by the following:

**p. Access or Disclosure Of Confidential Or Personal Information And Data-related Liability**

Damages arising out of:

**(1)** Any access to or disclosure of any person's or organization's confidential or personal information, including patents, trade secrets, processing methods, customer lists, financial information, credit card information or any other type of nonpublic information; or

**(2)** The loss of, loss of use of, damage to, corruption of, inability to access, or inability to manipulate "electronic data" that does not result from physical injury to tangible property.

This exclusion applies even if damages are claimed for notification costs, credit monitoring expenses, forensic expenses, public relations expenses or any other loss, cost or expense incurred by you or others arising out of that which is described in Paragraph **(1)** or **(2)** above.

**B.** The following paragraph is added to **SECTION III - LIMITS OF INSURANCE:**

Subject to **5.** above, the most we will pay under **COVERAGE A** for "property damage" because of all loss of "electronic data" arising out of any one "occurrence" is a sub-limit of $100,000.

**SECTION I - COVERAGE C MEDICAL PAYMENTS**

**EXCLUSIONS**

**Any Insured Amendment**

Exclusion **a. Any Insured** under **COVERAGE C MEDICAL PAYMENTS, 2. Exclusions** is deleted in its entirety and replaced with the following:

**a. Any Insured**

To any insured.

This exclusion does not apply to:

**(1)** "Not-for-profit members";

**(2)** "Golfing facility" members who are not paid a fee, salary, or other compensation; or

**(3)** "Volunteer workers".

This exclusion exception does not apply if **COVERAGE C MEDICAL PAYMENTS** is excluded by another endorsement to this Coverage Part.

**Product Amendment**

Exclusion **f. Products-Completed Operations Hazard** under **COVERAGE C MEDICAL PAYMENTS, 2. Exclusions** is deleted in its entirety and replaced with the following:

**f. Products-Completed Operations Hazard**

Included within the "products-completed operations hazard".

This exclusion does not apply to "your products" sold for use or consumption on your premises, while such products are still on your premises.

This exclusion exception, does not apply if **COVERAGE C MEDICAL PAYMENTS** is excluded by another endorsement to this Coverage Part.

**SECTION I - SUPPLEMENTARY PAYMENTS - COVERAGES A AND B**

**Expenses For Bail Bonds And Loss Of Earnings**

**A.** Subparagraph **1.b.** under **SUPPLEMENTARY PAYMENTS - COVERAGES A AND B** is deleted in its entirety and replaced with the following:

**b.** Up to $5,000 for cost of bail bonds required because of accidents or traffic law violations arising out of the use of any vehicle to which Bodily Injury Liability Coverage applies. We do not have to furnish these bonds.

Copyright, 2018 Selective Insurance Company of America. All rights reserved.
Includes copyrighted material of Insurance Services Office, Inc., with its permission.



INSURED'S COPY

**B.** Subparagraph **1.d.** under **SUPPLEMENTARY PAYMENTS - COVERAGES A AND B** is deleted in its entirety and replaced with the following:

**d.** All reasonable expenses incurred by the insured at our request to assist us in the investigation or defense of the claim or "suit", including actual loss of earnings up to $1,000 a day because of time off from work.

**SECTION II - WHO IS AN INSURED - Amendments**

**Not-for-Profit Organization Members**

The following paragraph is added to **SECTION II - WHO IS AN INSURED:**

If you are an organization other than a partnership, joint venture, or a limited liability company, and you are a not-for-profit organization, the following are included as additional insureds:

**1.** Your officials;

**2.** Your trustees;

**3.** Your members;

**4.** Your board members;

**5.** Your commission members;

**6.** Your agency members;

**7.** Your insurance managers;

**8.** Your elective or appointed officers; and

**9.** Your "not-for-profit members".

However only with respect to their liability for your activities or activities they perform on your behalf.

**Employees As Insureds Modified**

**A.** Subparagraph **2.a.(1)(a)** under **SECTION II - WHO IS AN INSURED** does not apply to "bodily injury" to a "temporary worker" caused by a co-"employee" who is not a "temporary worker".

**B.** Subparagraph **2.a.(2)** under **SECTION II - WHO IS AN INSURED** does not apply to "property damage" to the property of a "temporary worker" or "volunteer worker" caused by a co-"employee" who is not a "temporary worker" or "volunteer worker".

**C.** Subparagraph **2.a.(1)(d)** under **SECTION II - WHO IS AN INSURED** does not apply to "bodily injury" caused by cardio-pulmonary resuscitation or first aid services administered by a co-"employee".

With respect to this provision only, Subparagraph **(1)** of Exclusion **2. e. Employer's Liability** under **SECTION I - COVERAGES, COVERAGE A BODILY INJURY AND PROPERTY DAMAGE LIABILITY** does not apply.

**Newly Formed Or Acquired Organizations**

**A.** Subparagraph **3.a.** under **SECTION II - WHO IS AN INSURED** is deleted in its entirety and replaced with the following:

**a.** Coverage under this provision is afforded only until the 180th day after you acquire or form the organization or the end of the policy period, whichever is earlier. However, **COVERAGE A** does not apply to "bodily injury" or "property damage" that occurred before you acquired or formed the organization.

**B.** The following paragraph is added to **SECTION II - WHO IS AN INSURED,** Paragraph **3:**

If you are engaged in the business of construction of dwellings three stories or less in height, or other buildings three stories or less in height and less than 25,000 square feet in area, you will also be an insured with respect to "your work" only, for the period of time described above, for your liability arising out of the conduct of any partnership or joint venture of which you are or were a member, even if that partnership or joint venture is not shown as a Named Insured. However, this provision only applies if you maintain or maintained an interest of at least fifty percent in that partnership or joint venture for the period of that partnership or joint venture.

This provision does not apply to any partnership or joint venture that has been dissolved or otherwise ceased to function for more than thirty-six months.

With respect to the insurance provided by this provision, **Newly Formed or Acquired Organizations**, the following is added to **SECTION IV - COMMERCIAL GENERAL LIABILITY**, Paragraph **4. Other Insurance,** Subparagraph **b. Excess Insurance:**

The insurance provided by this provision, **Newly Formed or Acquired Organizations,** is excess over any other insurance available to the insured, whether primary, excess, contingent or on any other basis.

(All other provisions of this section remain unchanged)

**Blanket Additional Insureds - As Required By Contract**

Subject to the **Primary and Non-Contributory** provision set forth in this endorsement, **SECTION II - WHO IS AN INSURED** is amended to include as an additional insured:

**A. Owners, Lessees or Contractors/Architects, Engineers and Surveyors**

**1.** Any person or organization for whom you are performing operations when you and such person or organization have agreed in a written contract, written agreement or written permit that such person or organization be added as an additional insured on your commercial general liability policy; and

Copyright, 2018 Selective Insurance Company of America. All rights reserved.
Includes copyrighted material of Insurance Services Office, Inc., with its permission.

2. Any other person or organization, including any architects, engineers or surveyors not engaged by you, whom you are required to add as an additional insured under your policy in the contract or agreement in Paragraph **1.** above:

Such person or organization is an additional insured only with respect to liability for "bodily injury", "property damage" or "personal and advertising injury" caused, in whole or in part, by:

a. Your acts or omissions; or

b. The acts of omissions of those acting on your behalf;

in the performance of your ongoing operations performed for the additional insured in Paragraph **1.**, above.

However, this insurance does not apply to:

"Bodily injury", "property damage" or "personal and advertising injury" arising out of the rendering of, or the failure to render, any professional architectural, engineering or surveying services by or for you, including:

a. The preparing, approving, or failing to prepare or approve, maps, shop drawings, opinions, reports, surveys, field orders, change orders or drawings and specifications; and

b. Supervisory, inspection, architectural or engineering activities.

Professional services do not include services within construction means, methods, techniques, sequences and procedures employed by you in connection with your operations in your capacity as a construction contractor.

A person or organization's status as an additional insured under this endorsement ends when your operations for the person or organization described in Paragraph **1.** above are completed.

**B. Other Additional Insureds**

Any of the following persons or organizations with whom you have agreed in a written contract, written agreement or written permit that such persons or organizations be added as an additional insured on your commercial general liability policy:

**1. Lessors of Leased Equipment**

Any person or organization from whom you lease equipment, but only with respect to liability for "bodily injury", "property damage" or "personal and advertising injury" caused, in whole or in part, by your maintenance, operation or use of equipment leased to you by such person or organization.

With respect to the insurance afforded to these additional insureds, this insurance does not apply to any "occurrence" which takes place after the equipment lease expires.

**2. Managers or Lessors of Premises**

Any person or organization from whom you lease premises, but only with respect to liability arising out of the ownership, maintenance or use of that part of the premises leased to you.

This insurance does not apply to any "occurrence" which takes place after you cease to be a tenant of that premises.

**3. Mortgagees, Assignees or Receivers**

Any person or organization with respect to their liability as mortgagee, assignee or receiver and arising out of the ownership, maintenance or use of your premises.

This insurance does not apply to any "occurrence" which takes place after the mortgage is satisfied, or the assignment or receivership ends.

**4. Any Person or Organization Other Than A Joint Venture**

Any person or organization (other than a joint venture of which you are a member), but only with respect to liability for "bodily injury", "property damage" or "personal and advertising injury" caused, in whole or in part, by your acts or omissions or the acts of omissions of those acting on your behalf in the performance of your ongoing operations or in connection with property owned by you.

**5. State or Governmental Agency or Political Subdivision - Permits or Authorizations**

Any state or governmental agency or subdivision or political subdivision, but only with respect to:

a. Operations performed by you or on your behalf for which the state or governmental agency or subdivision or political subdivision has issued a permit or authorization; or

b. The following hazards for which the state or governmental agency or subdivision or political subdivision has issued a permit or authorization in connection with premises you own, rent or control and to which this insurance applies:

Copyright, 2018 Selective Insurance Company of America. All rights reserved.
Includes copyrighted material of Insurance Services Office, Inc., with its permission.



INSURED'S COPY

(1) The existence, maintenance, repair, construction, erection or removal of advertising signs, awnings, canopies, cellar entrances, coal holes, driveways, manholes, marquees, hoist away openings, sidewalk vaults, street banners or decorations and similar exposures;

(2) The construction, erection or removal of elevators; or

(3) The ownership, maintenance or use of any elevators covered by this insurance.

This insurance does not apply to:

(a) "Bodily injury" or "property damage" arising out of operations performed for the federal government, state or municipality; or

(b) "Bodily injury" or "property damage" included within the "products-completed operations hazard".

With respect to Paragraphs **2.** through **4.**, this insurance does not apply to structural alterations, new construction or demolition operations performed by or on behalf of such person or organization.

The provisions of this coverage extension do not apply unless the written contract or written agreement has been signed by the Named Insured or written permit issued prior to the "bodily injury" or "property damage" or "personal and advertising injury".

**Broad Form Vendors Coverage**

Subject to the **Primary and Non-Contributory** provision set forth in this endorsement, **SECTION II - WHO IS AN INSURED** is amended to include as an additional insured any person or organization (referred to below as vendor) for whom you have agreed in a written contract or written agreement to provide coverage as an additional insured under your policy. Such person or organization is an additional insured only with respect to "bodily injury" or "property damage" arising out of "your products" which are distributed or sold in the regular course of the vendor's business. However, the insurance afforded the vendor does not apply to:

a. "Bodily injury" or "property damage" for which the vendor is obligated to pay damages by reason of the assumption of liability in a contract or agreement; however this exclusion does not apply to liability for damages that the vendor would have in the absence of the contract or agreement;

b. Any express warranty unauthorized by you;

c. Any physical or chemical change in the product made intentionally by the vendor;

d. Repackaging, unless unpacked solely for the purpose of inspection, demonstration, testing, or the substitution of parts under instructions from the manufacturer, and then repackaged in the original container;

e. Any failure to make such inspections, adjustments, tests or servicing as the vendor has agreed to make or normally undertakes to make in the usual course of business in connection with the sale of the product; or

f. Products which, after distribution or sale by you, have been labeled or re-labeled or used as a container, part of ingredient of any other thing or substance by or for the vendor; however this insurance does not apply to any insured person or organization, from who you have acquired such products, or any ingredient, part or container, entering into, accompanying or containing such products.

The provisions of this coverage extension do not apply unless the written contract or written agreement has been signed by the Named Insured prior to the "bodily injury" or "property damage".

**Incidental Malpractice**

Subparagraph **2.a.(1)(d)** under **SECTION II - WHO IS AN INSURED** is deleted in its entirety and replaced with the following:

(d) Arising out of his or her providing or failing to provide professional health care services.

This does not apply to nurses, emergency medical technicians or paramedics if you are not in the business or occupation of providing any such professional services.

This also does not apply to "bodily injury" caused by cardio-pulmonary resuscitation or first aid services administered by a co-"employee".

This provision does not apply if you are a Social Service or Senior Living risk.

**SECTION IV - COMMERCIAL GENERAL LIABILITY CONDITIONS - Amendments**

**Knowledge Of Occurrence, Claim, Suit Or Loss**

The following is added to Paragraph **2. Duties in the Event of Occurrence, Offense, Claim or Suit** under **SECTION IV - COMMERCIAL GENERAL LIABILITY CONDITIONS:**

The requirements under this paragraph do not apply until after the "occurrence" or offense is known to:

1. You, if you are an individual;

2. A partner, if you are a partnership;

Copyright, 2018 Selective Insurance Company of America. All rights reserved.
Includes copyrighted material of Insurance Services Office, Inc., with its permission.

3. An "executive officer" or insurance manager, if you are a corporation;
4. Your members, managers or insurance manager, if you are a limited liability company; or
5. Your elected or appointed officials, officers, members, trustees, board members, commission members, agency members, or your administrator or your insurance manager if you are an organization other than a partnership, joint venture, or limited liability company.

**Primary and Non-Contributory Provision**

The following is added to Paragraph **4. Other Insurance, b. Excess Insurance** under **SECTION IV - COMMERCIAL GENERAL LIABILITY CONDITIONS:**

This insurance is primary to and we will not seek contribution from any other insurance available to an additional insured under this policy provided that:

**(1)** The additional insured is a Named Insured under such other insurance; and

**(2)** You have agreed in a written contract, written agreement or written permit that this insurance would be primary and would not seek contribution from any other insurance available to the additional insured.

**Unintentional Failure To Disclose Hazards**

The following is added to Paragraph **6. Representations** under **SECTION IV - COMMERCIAL GENERAL LIABILITY CONDITIONS:**

However, if you should unintentionally fail to disclose any existing hazards in your representations to us at the inception date of the policy, or during the policy period in connection with any additional hazards, we shall not deny coverage under this Coverage Part based upon such failure to disclose hazards.

**Waiver Of Transfer Of Rights Of Recovery**

The following is added to Paragraph **8. Transfer of Rights Of Recovery Against Others To Us** under **SECTION IV - COMMERCIAL GENERAL LIABILITY CONDITIONS:**

We will waive any right of recovery we may have against a person or organization because of payments we make for "bodily injury" or "property damage" arising out of your ongoing operations or "your work" done under a written contract or written agreement and included in the "products-completed operations hazard", if:

1. You have agreed to waive any right of recovery against that person or organization in a written contract or written agreement;
2. Such person or organization is an additional insured on your policy; or
3. You have assumed the liability of that person or organization in that same contract, and it is an "insured contract".

The section above only applies to that person or organization identified above, and only if the "bodily injury" or "property damage" occurs subsequent to the execution of the written contract or written agreement.

**Liberalization**

The following condition is added to **SECTION IV - COMMERCIAL GENERAL LIABILITY CONDITIONS:**

If we revise this Coverage Part to provide more coverage without additional premium charge, subject to our filed company rules, your policy will automatically provide the additional coverage as of the day the revision is effective in your state.

**Two or More Coverage Parts or Policies Issued By Us**

(This provision is not Applicable in the state of New York or Wisconsin).

The following condition is added to **SECTION IV - COMMERCIAL GENERAL LIABILITY CONDITIONS:**

It is our intention that the various coverage parts or policies issued to you by us, or any company affiliated with us, do not provide any duplication or overlap of coverage. We have exercised diligence to draft our coverage parts and policies to reflect this intention. However, if the facts and circumstances that will respond to any claim or "suit" give rise to actual or claimed duplication or overlap of coverage between the various coverage parts or policies issued to you by us or any company affiliated with us, the limit of insurance under all such coverage parts or policies combined shall not exceed the highest applicable limit under this coverage, or any one of the other coverage forms or policies.

This condition does not apply to any Excess or Umbrella policy issued by us specifically to apply as excess insurance over this coverage part or policy to which this coverage part is attached.

**SECTION V - DEFINITIONS**

**Discrimination**

(This provision does not apply in New York).

**A.** The following is added to Definition **14.** "Personal and advertising injury":

"Personal and advertising injury" also means "discrimination" that results in injury to the feelings or reputation of a natural person, however only if such "discrimination" or humiliation is:

1. Not done by or at the direction of:
   a. The insured; or

Copyright, 2018 Selective Insurance Company of America. All rights reserved.
Includes copyrighted material of Insurance Services Office, Inc., with its permission.

b. Anyone considered an insured under **SECTION II - WHO IS AN INSURED;**

2. Not done intentionally to cause harm to another person.

3. Not directly or indirectly related to the employment, prospective employment or termination of employment of any person or persons by any insured.

4. Not arising out of any "advertisement" by the insured.

**B.** The following definition is added to **SECTION V - DEFINITIONS:**

"Discrimination" means:

a. Any act or conduct that would be considered discrimination under any applicable federal, state, or local statute, ordinance or law;

b. Any act or conduct that results in disparate treatment of, or has disparate impact on, a person, because of that person's race, religion, gender, sexual orientation, age, disability or physical impairment; or

c. Any act or conduct characterized or interpreted as discrimination by a person based on that person's race, religion, gender, sexual orientation, age, disability or physical impairment.

It does not include acts or conduct characterized or interpreted as sexual intimidation or sexual harassment, or intimidation or harassment based on a person's gender.

**Electronic Data**

The following definition is added to **SECTION V - DEFINITIONS:**

"Electronic data" means information, facts or programs stored as or on, created or used on, or transmitted to or from computer software, including systems and applications software, hard or floppy disks, CD-ROMS, tapes, drives, cell, data processing devices or any other media which are used with electronically controlled equipment. For the purpose of the Electronic Data Liability coverage provided by this endorsement, Definition **17.** "Property damage" is deleted in its entirety and replaced by the following:

**17.** "Property damage" means:

a. Physical injury to tangible property, including all resulting loss of use of that property. All such loss of use shall be deemed to occur at the time of the physical injury that caused it; or

b. Loss of, loss of use of, damage to, corruption of, inability to access, or inability to properly manipulate "electronic data", resulting from physical injury to tangible property. All such loss of "electronic data" shall be deemed to occur at the time of the "occurrence" that caused it.

For the purpose of the Electronic Data Liability coverage provided by this endorsement, "electronic data" is not tangible property.

**Employee Amendment**

Definition **5.** "Employee" under **SECTION V - DEFINITIONS** is deleted in its entirety and replaced by the following:

**5.** "Employee" includes a "leased worker", or a "temporary worker". If you are a School, "Employee" also includes a student teacher.

**Golfing Facility**

The following definition is added to **SECTION V - DEFINITIONS:**

"Golfing facility" means a golf course, golf club, driving range, or miniature golf course.

**Mental Anguish Amendment**

(This provision does not apply in New York).

Definition **3.** "Bodily injury" under **SECTION V - DEFINITIONS** is deleted in its entirety and replaced with the following:

**3.** "Bodily injury" means bodily injury, sickness or disease sustained by a person, including death resulting from any of these at any time. This includes mental anguish resulting from any bodily injury, sickness or disease sustained by a person. (In New York, mental anguish has been determined to be "bodily injury").

**Not-for-profit Member**

The following definition is added to **SECTION V - DEFINITIONS:**

"Not-for-profit member" means a person who is a member of a not-for-profit organization, including clubs and churches, who receives no financial or other compensation.

Copyright, 2018 Selective Insurance Company of America. All rights reserved.
Includes copyrighted material of Insurance Services Office, Inc., with its permission.



INSURED'S COPY

# ElitePac®
# Commercial Automobile Extension

COMMERCIAL AUTO
**CA 78 09 11 17**

## THIS ENDORSEMENT CHANGES THE POLICY. PLEASE READ IT CAREFULLY.

This endorsement modifies insurance provided under the following:

BUSINESS AUTO COVERAGE FORM

With respect to coverage provided by this endorsement, the provisions of the Business Auto Coverage Form apply unless modified by the endorsement.

**AMENDMENTS TO SECTION II - LIABILITY COVERAGE**

**A.** If this policy provides Auto Liability coverage for Owned Autos, the following extensions are applicable accordingly:

**NEWLY ACQUIRED OR FORMED ORGANIZATIONS**

The following is added to **SECTION II, A.1. - Who Is An Insured:**

Any organization you newly acquire or form, other than a partnership, joint venture or limited liability company over which you maintain ownership or majority interest, will qualify as a Named Insured if there is no similar insurance available to that organization. However:

1. Coverage under this provision is afforded only until the 180th day after you acquire or form the organization or the end of the policy period, whichever is earlier;
2. Coverage does not apply to "bodily injury" or "property damage" resulting from an "accident" that occurred before you acquired or formed the organization.

No person or organization is an "insured" with respect to the conduct of any current or past partnership, joint venture or limited liability company that is not shown as a Named Insured in the Declarations.

**EXPENSES FOR BAIL BONDS AND LOSS OF EARNINGS**

Paragraphs **(2)** and **(4)** of **SECTION II, A.2.a. - Supplementary Payments** are deleted in their entirety and replaced with the following:

**(2)** Up to the Limit of Insurance shown on the ElitePac Schedule for the cost of bail bonds (including bonds for related traffic law violations) required because of an "accident" covered under this policy. We do not have to furnish these bonds.

**(4)** All reasonable expenses incurred by the "insured" at our request. This includes actual loss of earnings because of time off from work, which we will pay up to the Limit of Insurance shown on the ElitePac Schedule.

**EMPLOYEE INDEMNIFICATION AND EMPLOYER'S LIABILITY AMENDMENT**

The following is added to **SECTION II, B.4. - Exclusions:**

This exclusion does not apply to a "volunteer worker" who is not entitled to workers compensation, disability or unemployment compensation benefits.

**FELLOW EMPLOYEE COVERAGE**

The **Fellow Employee** Exclusion, **SECTION II, B.5. -** is deleted in its entirety.

**CARE, CUSTODY OR CONTROL AMENDMENT**

The following is added to **SECTION II, B.6. - Exclusions:**

This exclusion does not apply to property owned by anyone other than an "insured", subject to the following:

1. The most we will pay under this exception for any one "accident" is the Limit of Insurance stated in the ElitePac Schedule; and
2. A per "accident" deductible as stated in the ElitePac Schedule applies to this exception.

**B.** If this policy provides Auto Liability coverage for Owned Autos or Non-Owned Autos, the following extension is applicable accordingly:

**LIMITED LIABILITY COMPANIES**

The following is added to **SECTION II, A.1. - Who Is An Insured:**

If you are a limited liability company, your members and managers are "insureds" while using a covered "auto" you don't own, hire or borrow during the course of their duties for you.

**BLANKET ADDITIONAL INSUREDS - As Required By Contract**

The following is added to **SECTION II, A.1. - Who Is An Insured:**

Copyright, 2017 Selective Insurance Company of America. All rights reserved.
Includes copyrighted material of Insurance Services Office, Inc., with its permission.



INSURED'S COPY

Any person or organization whom you have agreed in a written contract, written agreement or written permit that such person or organization be added as an additional "insured" on your policy. Such person or organization is an additional "insured" only with respect to liability for "bodily injury" or "property damage" caused, in whole or in part, by your ownership, maintenance or use of a covered "auto". This coverage shall be primary and non-contributory with respect to the additional "insured". This provision only applies if:

1. It is required in the written contract, written agreement or written permit identified in this section;
2. It is permitted by law; and
3. The written contract or written agreement has been executed (executed means signed by a named insured) or written permit issued prior to the "bodily injury" or "property damage".

C. If this policy provides Auto Liability coverage for Non-Owned Autos, the following extension is applicable accordingly:

**EMPLOYEES AS INSUREDS**

If this policy provides Auto Liability coverage for Non-Owned Autos, the following is added to **SECTION II, A.1. - Who Is An Insured:**

Any "employee" of yours is an "insured" while using a covered "auto" you don't own, hire or borrow in your business or your personal affairs.

An "employee" of yours is an "insured" while operating an "auto" hired or rented under a contract or agreement in that "employee's" name with your permission, while performing duties related to the conduct of your business.

**AMENDMENTS TO SECTION III - PHYSICAL DAMAGE COVERAGE**

If this policy provides Comprehensive, Specified Causes of Loss or Collision coverage, the following extensions are applicable for those "autos" for which Comprehensive, Specified Causes of Loss or Collision coverage is purchased:

**TOWING AND LABOR**

**SECTION III, A.2. - Towing** is deleted in its entirety and replaced with the following:

We will pay all reasonable towing and labor costs up to the maximum Limit of Insurance shown on the ElitePac Schedule per tow each time a covered "Private Passenger Auto", "Social Service Van or Bus" or "Light Truck" is disabled and up to the maximum Limit of Insurance per tow each time a covered "Medium Truck", "Heavy Truck" or "Extra Heavy Truck" is disabled.

For labor charges to be eligible for reimbursement the labor must be performed at the place of disablement.

This coverage extension does not apply to Emergency Services Organizations and Governmental Entities.

**GLASS BREAKAGE DEDUCTIBLE**

The following is added to **SECTION III, A.3. - Glass Breakage - Hitting A Bird Or Animal - Falling Objects or Missiles:**

If damaged glass is repaired rather than replaced, no deductible will apply for such repair. This extension does not apply to Emergency Services Organizations and Governmental Entities.

**ADDITIONAL TRANSPORTATION EXPENSES SECTION III, A.4.a. - Transportation Expenses** is deleted in its entirety and replaced with the following:

We will pay up to the maximum Limit of Insurance shown on the ElitePac Schedule for temporary transportation expenses that you incur because of any "loss" to a covered "auto", but only if the covered "auto" carries the coverages and meets the requirements described in **1.** or **2.** below:

1. We will pay temporary transportation expenses for total theft of a covered "auto". We will only pay for such expenses incurred during the period beginning 24 hours after the theft and ending, regardless of the policy's expiration, when the covered "auto" is returned to use or we pay for its "loss".
2. For "loss" other than total theft of a covered "auto" under Comprehensive or Specified Causes of Loss Coverage, or for any "loss" under Collision Coverage to a covered "auto", we will only pay for those temporary transportation expenses incurred during the policy period beginning 24 hours after the "loss" and ending, regardless of the policy's expiration, with the lesser of the number of days reasonably required to repair or replace the covered "auto" or 30 days.

   Paragraph **2.** of this extension does not apply while there are spare or reserve "autos" available to you for your operations.

This coverage extension does not apply to Emergency Services Organizations and Governmental Entities.

**HIRED AUTO PHYSICAL DAMAGE COVERAGE**

The following is added to **SECTION III, A.4. - Coverage Extensions:**

Physical Damage coverage is hereby extended to apply to Physical Damage "loss" to "autos" leased, hired, rented or borrowed without a driver. We will provide coverage equal to the broadest coverage available to any covered "auto" shown in the Declarations. But, the most we will pay for "loss" to each "auto" under this coverage extension is the lesser of:

Copyright, 2017 Selective Insurance Company of America. All rights reserved.
Includes copyrighted material of Insurance Services Office, Inc., with its permission.

1. The Limit of Insurance stated in the ElitePac Schedule; or
2. The actual cash value of the damaged or stolen property as of the time of the "loss"; or
3. The actual cost of repairing or replacing the damaged or stolen property with other property of like kind and quality. A part is of like kind and quality when it is of equal or better condition than the pre-accident part. We will use the original equipment from the manufacturer when:
   (a) The operational safety of the vehicle might otherwise be impaired;
   (b) Reasonable and diligent efforts to locate the appropriate rebuilt, aftermarket or used part have been unsuccessful; or
   (c) A new original equipment part of like kind and quality is available and will result in the lowest overall repair cost.

For each leased, hired, rented or borrowed "auto" our obligation to pay "losses" will be reduced by a deductible equal to the highest deductible applicable to any owned "auto" for that coverage. No deductible will be applied to "losses" caused by fire or lightning.

**SECTION IV, B.5. Other Insurance** Condition, Paragraph **5.b.** is deleted in its entirety and replaced by the following:

For Hired Auto Physical Damage Coverage, the following are deemed to be covered "autos" you own:

1. Any covered "auto" you lease, hire, rent, or borrow; and
2. Any covered "auto" hired or rented by your "employee" under a contract or agreement in that "employee's" name, with your permission, while performing duties related to the conduct of your business.

However, any "auto" that is leased, hired, rented or borrowed with a driver is not a covered "auto".

This coverage extension does not apply to Emergency Services Organizations and Governmental Entities.

**HIRED AUTO LOSS OF USE COVERAGE**

The following is added to **SECTION III, A.4. - Coverage Extensions:**

We will pay expenses for which you are legally responsible to pay up to the Limit of Insurance shown on the ElitePac Schedule per "accident" for loss of use of a leased, hired, rented or borrowed "auto" if it results from an "accident".

This coverage extension does not apply to Emergency Services Organizations, Governmental Entities, and Schools.

**AUTO LOAN/LEASE GAP COVERAGE (Not Applicable in New York)**

The following is added to **SECTION III, A.4. - Coverage Extensions:**

In the event of a total "loss" to a covered "auto" we will pay any unpaid amount due on the lease or loan for a covered "auto", less:

1. The amount paid under the Physical Damage Coverage Section of the policy; and
2. Any:
   a. Overdue lease/loan payments at the time of "loss";
   b. Financial penalties imposed under a lease for excessive use, abnormal wear and tear, high mileage or similar charges;
   c. Security deposits not refunded by the lessor or financial institution;
   d. Costs for extended warranties, credit life, health, accident, or disability insurance purchased with the loan or lease; and
   e. Carry-over balances from previous leases or loans.

You are responsible for the deductible applicable to the "loss" for the covered "auto".

**PERSONAL EFFECTS**

The following is added to **SECTION III, A.4. - Coverage Extensions:**

If this policy provides Comprehensive Coverage for a covered "auto" you own and that covered "auto" is stolen, we will pay up to the Limit of Insurance shown on the ElitePac Schedule, without application of a deductible, for lost personal effects that were in the covered "auto" at the time of theft. Personal effects do not include jewelry, tools, money, or securities. This coverage is excess over any other collectible insurance.

**AIRBAG COVERAGE**

The following is added to **SECTION III, B.3.a. - Exclusions:**

Mechanical breakdown does not include the accidental discharge of an airbag.

This coverage extension does not apply to Emergency Services Organizations and Governmental Entities.

**EXPANDED AUDIO, VISUAL, AND DATA ELECTRONIC EQUIPMENT COVERAGE**

**SECTION III, B.4. - Exclusions**

This exclusion does not apply to the following:

1. Global positioning systems;
2. "Telematic devices"; or
3. Electronic equipment that reproduces, receives or transmits visual or data signals and accessories used with such equipment, provided such equipment is:

Copyright, 2017 Selective Insurance Company of America. All rights reserved.
Includes copyrighted material of Insurance Services Office, Inc., with its permission.

a. Permanently installed in or upon the covered "auto" at the time of the "loss";

b. Removable from a housing unit that is permanently installed in the covered "auto" at the time of the "loss";

c. Designed to be solely operated by use of power from the "auto's" electrical system; or

d. Designed to be used solely in or upon the covered "auto".

For each covered "loss" to such equipment, a deductible of $50 shall apply, unless the deductible otherwise applicable to such equipment is less than $50, at which point the lower deductible, if any, will apply.

**COMPREHENSIVE DEDUCTIBLE - LOCATION TRACKING DEVICE**

The following is added to **SECTION III, D. - Deductible:**

Any Comprehensive Coverage Deductible shown in the Declarations will be reduced by 50% for any "loss" caused by theft if the covered "auto" is equipped with a location tracking device and that device was the sole method used to recover the "auto".

**PHYSICAL DAMAGE LIMIT OF INSURANCE**

**SECTION III, C. - Limit Of Insurance** is deleted in its entirety and replaced with the following:

The most we will pay for a "loss" in any one "accident" is the lesser of:

1. The actual cash value of the damaged or stolen property as of the time of the "loss"; or
2. The cost of repairing or replacing the damaged or stolen property with other property of like kind and quality.

This coverage extension does not apply to Emergency Services Organizations and Governmental Entities.

**AMENDMENTS TO SECTION IV - BUSINESS AUTO CONDITIONS**

**DUTIES IN THE EVENT OF ACCIDENT, CLAIM, SUIT OR LOSS**

The following is added to **SECTION IV, A.2.a. - Duties In The Event Of Accident, Claim, Suit Or Loss:**

The notice requirements for reporting "accident" claim, "suit" or "loss" information to us, including provisions related to the subsequent investigation of such "accident", claim, "suit" or "loss" do not apply until the "accident", claim, "suit" or "loss" is known to:

1. You, if you are an individual;
2. A partner, if you are a partnership;
3. An executive officer or insurance manager, if you are a corporation;
4. Your members, managers or insurance manager, if you are a limited liability company;
5. Your elected or appointed officials, trustees, board members or your insurance manager, if you are an organization other than a partnership, joint venture or limited liability company.

But, this section does not amend the provisions relating to notification of police or protection or examination of the property that was subject to the "loss".

**WAIVER OF SUBROGATION**

**SECTION IV, A.5. - Transfer Of Rights Of Recovery Against Others To Us** is deleted in its entirety and replaced with the following:

We waive any right of recovery we may have against any person or organization because of payments we make for "bodily injury" or "property damage" resulting from the ownership, maintenance or use of a covered "auto" but only when you have assumed liability for such "bodily injury" or "property damage" in an "insured contract". In all other circumstances, if a person or organization to or for whom we make payment under this Coverage Form has rights to recover damages from another, those rights are transferred to us.

**MULTIPLE DEDUCTIBLES**

The following is added to **SECTION IV, A. - Loss Conditions:**

If a "loss" from one event involves two or more covered "autos" and coverage under Comprehensive or Specified Causes of Loss applies, only the highest applicable deductible will be applied.

**CONCEALMENT, MISREPRESENTATION OR FRAUD**

The following is added to **SECTION IV, B.2. - Concealment, Misrepresentation Or Fraud:**

If you should unintentionally fail to disclose any existing hazards in your representations to us prior to the inception date of the policy or during the policy period in connection with any newly discovered hazards, we will not deny coverage under this Coverage Form based upon such failure.

**POLICY PERIOD, COVERAGE TERRITORY**

**SECTION IV, B.7. - Policy Period, Coverage Territory** is deleted in its entirety and replaced with the following:

Under this Coverage Form, we cover "accidents" and "losses" occurring:

a. During the policy period shown in the Declarations; and

b. Within the "Coverage Territory".

Copyright, 2017 Selective Insurance Company of America. All rights reserved.
Includes copyrighted material of Insurance Services Office, Inc., with its permission.

We also cover "loss" to or "accidents" involving a covered "auto" while being transported between any of these places.

**TWO OR MORE COVERAGE FORMS OR POLICIES ISSUED BY US - DEDUCTIBLES**

The following is added to **SECTION IV, B.8. - Two Or More Coverage Forms Or Policies Issued By Us:**

If a "loss" covered under this Coverage Form also involves a "loss" to other property resulting from the same "accident" that is covered under this policy or another policy issued by us or any member company of ours, only the highest applicable deductible will be applied.

**AMENDMENTS TO SECTION V - DEFINITIONS**

**BODILY INJURY INCLUDING MENTAL ANGUISH (Not Applicable in New York)**

The definition of bodily injury is deleted in its entirety and replaced by the following:

"Bodily injury" means bodily injury, sickness, or disease sustained by a person, including death resulting from any of these. "Bodily injury" includes mental anguish resulting from bodily injury, sickness or disease sustained by a person.

**ADDITIONS TO SECTION V - DEFINITIONS**

**COVERAGE TERRITORY**

"Coverage Territory" means:

1. The United States of America (including its territories and possessions), Canada and Puerto Rico; and
2. Anywhere in the world, except for any country or jurisdiction that is subject to trade or other economic sanction or embargo by the United States of America, if a covered "auto" is leased, hired, rented, or borrowed without a driver for a period of 30 days or less, and the insured's responsibility to pay "damages" is determined in a "suit" on the merits in and under the substantive law of the United States of America (including its territories and possessions), Puerto Rico, or Canada, or in a settlement we agree to.

If we are prevented by law, or otherwise, from defending the "insured" in a "suit" brought in a location described in Paragraph **2.** above, the insured will conduct a defense of that "suit". We will reimburse the "insured" for the reasonable and necessary expenses incurred for the defense of any such "suit" seeking damages to which this insurance applies, and that we would have paid had we been able to exercise our right and duty to defend.

**EXTRA HEAVY TRUCK**

"Extra Heavy Truck" means a truck with a gross vehicle weight rating of 45,001 pounds or more.

**HEAVY TRUCK**

"Heavy Truck" means a truck with a gross vehicle weight rating of 20,001 pounds to 45,000 pounds.

**LIGHT TRUCK**

"Light Truck" means a truck with a gross vehicle weight rating of 10,000 pounds or less.

**MEDIUM TRUCK**

"Medium Truck" means a truck with a gross vehicle weight rating of 10,001 pounds to 20,000 pounds.

**PRIVATE PASSENGER AUTO**

"Private Passenger Auto" means a four-wheel "auto" of the private passenger or station wagon type. A pickup, panel truck or van not used for business is included within the definition of a "private passenger auto".

**SOCIAL SERVICE VAN OR BUS**

"Social Service Van or Bus" means a van or bus used by a government entity, civic, charitable or social service organization to provide transportation to clients incidental to the social services sponsored by the organization, including special trips and outings.

**TELEMATIC DEVICE**

"Telematic Device" includes devices designed for the collection and dissemination of data for the purpose of monitoring vehicle and/or driver performance. This includes Global Positioning System technology, wireless safety communications and automatic driving assistance systems, all integrated with computers and mobile communications technology in automotive navigation systems.

**VOLUNTEER WORKER**

"Volunteer worker" means a person who performs business duties for you, for no financial or other compensation.

Copyright, 2017 Selective Insurance Company of America. All rights reserved.
Includes copyrighted material of Insurance Services Office, Inc., with its permission.

# ElitePac®
# Commercial Automobile Extension

COMMERCIAL AUTO
**CA 78 16 11 17**

## SCHEDULE OF COVERAGE EXTENSIONS AND LIMITS OF INSURANCE

This ElitePac Schedule is a summary of additional coverages, coverage modifications and corresponding Limits of Insurance that supplements the Business Auto Coverage Form. No coverage is provided by this summary. Refer to the actual endorsement for changes affecting your insurance protection.

| **DESCRIPTION** | |
|---|---|
| **AMENDMENTS TO SECTION II - LIABILITY COVERAGE** | |
| Newly Acquired Or Formed Organizations | Coverage Extension |
| Limited Liability Companies | Coverage Extension |
| Employees As Insureds | Coverage Extension |
| Blanket Additional Insureds | Coverage Extension |
| Expenses For Bail Bonds And Loss Of Earnings | |
| Bail Bonds | $3,000 Per "Accident" |
| Loss Of Earnings | $1,000 Per Day |
| Employee Indemnification and Employer's Liability Amendment | Coverage Extension |
| Fellow Employee Coverage | Coverage Extension |
| Care, Custody Or Control Amendment | $1,000 per "Accident"; $500 Deductible Per "Accident" |
| **AMENDMENTS TO SECTION III - PHYSICAL DAMAGE COVERAGE** | |
| Towing And Labor | Coverage Extension |
| Private Passenger Auto, Social Service Van or Bus, Light Truck<br>Medium, Heavy and Extra Heavy Trucks | $75 Per Tow<br>$150 Per Tow |
| Glass Breakage Deductible | Coverage Extension |
| Additional Transportation Expenses | $60 per day up to a maximum of $1,800 |
| Hired Auto Physical Damage Coverage | $75,000 per "loss" |
| Hired Auto Loss of Use Coverage | $750 Per "Accident" |
| Auto Loan/Lease Gap Coverage (Not Available in New York) | Coverage Extension |
| Personal Effects | $500 Per "Accident" |
| Airbag Coverage | Coverage Extension |
| Expanded Audio, Visual, And Data Electronic Equipment Coverage | Coverage Extension |
| Comprehensive Deductible - Location Tracking Device | Coverage Extension |
| Physical Damage Limit Of Insurance | Coverage Extension |

Copyright, 2017 Selective Insurance Company of America. All rights reserved.
Includes copyrighted material of Insurance Services Office, Inc., with its permission.



INSURED'S COPY

PIMA COUNTY

**PROCUREMENT DEPARTMENT**
DESIGN & CONSTRUCTION DIVISION • 150 W. CONGRESS STREET, 5th FLOOR • TUCSON, ARIZONA 85701-1317
TELEPHONE (520) 724-3727 • FAX (520) 724-3646

INSURANCE CARRIER VERIFIES PIMA COUNTY IS NAMED AS ADDITIONAL INSURED TO THE COMPREHENSIVE COMMERCIAL GENERAL LIABILITY POLICY AND THE COMPREHENSIVE AUTOMOBILE LIABILITY POLICY REFERENCED BELOW, THE COUNTY BEING ADDED BY ENDORSEMENT TO THE POLICIES.

**Green Tanner Industrial Construction, LLC**

Insured Firm

S-230250802

Policy Number

Selective Insurance Company

Insurance Carrier

Authorized Carrier Signature

Diana Vega

Printed Name

10/04/2021

Date of Signature

NOTE: This document must be included with Insurance Certificates at time of signing contract or renewing contract.

## WAIVER OF OUR RIGHT TO RECOVER FROM OTHERS ENDORSEMENT

We have the right to recover our payments from anyone liable for an injury covered by this policy. We will not enforce our right against the person or organization named in the Schedule. (This agreement applies only to the extent that you perform work under a written contract that requires you to obtain this agreement from us).

This agreement shall not operate directly or indirectly to benefit anyone not named in the Schedule.

Schedule

| State | Blanket/Schedule/State |
|---|---|
| AZ | BLANKET |

**Blanket Waiver:** Anyone for whom you have agreed to provide this Waiver subject to the terms of this endorsement

This endorsement changes the policy to which it is attached and is effective on the date issued unless otherwise stated.

**(The information below is required only when this endorsement is issued subsequent to preparation of the policy.)**

Endorsement Effective 10/17/2020 Policy No. 1019265 Endorsement No. 8
Insured Green Tanner Industrial Construction LLC Premium $

Insurance Company CopperPoint General Insurance Company Countersigned by



© 1983 National Council on Compensation Insurance.

Bond No. 609204772

# ARIZONA STATUTORY PERFORMANCE BOND

PURSUANT TO TITLE 34, ARIZONA REVISED STATUTES

(Penalty of this bond must be 100% of the Contract amount)

KNOW ALL MEN BY THESE PRESENTS THAT:

**Green Tanner Industrial Construction, LLC**

(hereinafter "Principal"), as Principal, and Liberty Mutual Insurance Company

(hereinafter "Surety"), a corporation organized and existing under the laws of the State of Massachusetts with its principal office in the City of Boston, holding a certificate of authority to transact surety business in Arizona issued by the Director of Insurance pursuant to Title 20, Chapter 2, Article 1, as Surety, are held and firmly bound unto Pima County, Arizona (hereinafter "Obligee") in the amount of **$1,180,693.00**, for the payment whereof, Principal and Surety bind themselves, and their heirs, administrators, executors, successors and assigns, jointly and severally, firmly by these presents.

WHEREAS, the Principal has entered into a certain written contract with the Obligee, dated the **19th of October, 2021** for:

**Solicitation No. IFB-PO-2200012 Mike Jacobs Sports Park LED Lighting**

which contract is hereby referred to and made a part hereof as fully and to the same extent as if copied at length herein.

NOW, THEREFORE, THE CONDITION OF THE OBLIGATION IS SUCH, that if the Principal faithfully performs and fulfills all of the undertakings, covenants, terms, conditions and agreements of the contract during the original term of the contract and any extension of the contract, with or without notice to the Surety, and during the life of any guaranty required under the contract, and also performs and fulfills all of the undertakings, covenants, terms, conditions and agreements of all duly authorized modifications of the contract that may hereafter be made, notice of which modifications to the Surety being hereby waived, the above obligation is void. Otherwise it remains in full force and effect.

PROVIDED, HOWEVER, that this bond is executed pursuant to the provisions of Title 34, Chapter 2, Article 2, Arizona Revised Statutes, and all liabilities on this bond shall be determined in accordance with the provisions of Title 34, Chapter 2, Article 2, Arizona Revised Statutes, to the same extent as if it were copies at length in this Contract.

The prevailing party in a suit on this bond shall recover as part of the judgment reasonable attorney fees that may be fixed by a judge of the court.

Witness our hands this 4th day of October, 2021.

Witness our hands this 4th day of October, 2021.

Green Tanner Industrial Construction, LLC By:
Principal

Liberty Mutual Insurance Company By:
Surety

Alexis Apostolidis, Attorney-in-Fact

By:
Sarah Bracy AZ Resident Agent
license number 18394360

Bond No. 609204772

# ARIZONA STATUTORY PAYMENT BOND

PURSUANT TO TITLE 34, ARIZONA REVISED STATUTES

(Penalty of this bond must be 100% of the Contract amount)

KNOW ALL MEN BY THESE PRESENTS THAT:

**Green Tanner Industrial Construction, LLC**

(hereinafter "Principal"), as Principal, and Liberty Mutual Insurance Company

(hereinafter "Surety"), a corporation organized and existing under the laws of the State of Massachusetts, with its principal office in the City of Boston, holding a certificate of authority to transact surety business in Arizona issued by the Director of Department of Insurance pursuant to Title 20, Chapter 2, Article 1, as Surety, are held and firmly bound unto Pima County (hereinafter "Obligee") in the amount of **$1,180,693.00**, for the payment whereof, Principal and Surety bind themselves, and their heirs, administrators, executors, successors and assigns, jointly and severally, firmly by these presents.

WHEREAS, the Principal has entered into a certain written contract with the Obligee, dated the, **19th of October, 2021** for:

**Solicitation No. IFB-PO-2200012 Mike Jacobs Sports Park LED Lighting**

which contract is hereby referred to and made a part hereof as fully and to the same extent as if copied at length herein.

NOW, THEREFORE, THE CONDITION OF THE OBLIGATION IS SUCH, that if the Principal promptly pays all monies due to all persons supplying labor or materials to the Principal or the Principal's subcontractors in the prosecution of the work provided for in the contract, this obligation is void. Otherwise it remains in full force and effect.

PROVIDED, HOWEVER, that this bond is executed pursuant to the provisions of Title 34, Chapter 2, Article 2, Arizona Revised Statutes, and all liabilities on this bond shall be determined in accordance with the provisions, conditions and limitations of Title 34, Chapter 2, Article 2, Arizona Revised Statutes, to the same extent as if it were copied at length in this Contract.

The prevailing party in a suit on this bond shall recover as part of the judgment reasonable attorney fees that may be fixed by a judge in the court.

Witness our hands this 4th day of October, 2021.

Green Tanner Industrial Construction, LLC — By: [signature]
Principal

Liberty Mutual Insurance Company — By: [signature]
Surety — Alexis Apostolidis, Attorney-in-Fact

By: [signature]
Sarah Bracy AZ Resident Agent
license number 18394360

**This Power of Attorney limits the acts of those named herein, and they have no authority to bind the Company except in the manner and to the extent herein stated.**

Liberty Mutual Insurance Company
The Ohio Casualty Insurance Company
West American Insurance Company

Certificate No: **8206027-985949**

# POWER OF ATTORNEY

**KNOWN ALL PERSONS BY THESE PRESENTS:** That The Ohio Casualty Insurance Company is a corporation duly organized under the laws of the State of New Hampshire, that Liberty Mutual Insurance Company is a corporation duly organized under the laws of the State of Massachusetts, and West American Insurance Company is a corporation duly organized under the laws of the State of Indiana (herein collectively called the "Companies"), pursuant to and by authority herein set forth, does hereby name, constitute and appoint, Aimee R. Perondine; Alexis Apostolidis; Bethany Stevenson; Brendan Fletcher; Bryan M. Caneschi; Cassandra Baez; Donna M. Planeta; Eric Strba; Jacqueline Susco; Janee Wright; Joshua Sanford; Kathryn Pryor; Michelle Anne McMahon; Nicholas Turecamo; Phillip Knower; Rebecca M. Stevenson; Tanya Nguyen

all of the city of Hartford state of CT each individually if there be more than one named, its true and lawful attorney-in-fact to make, execute, seal, acknowledge and deliver, for and on its behalf as surety and as its act and deed, any and all undertakings, bonds, recognizances and other surety obligations, in pursuance of these presents and shall be as binding upon the Companies as if they have been duly signed by the president and attested by the secretary of the Companies in their own proper persons.

**IN WITNESS WHEREOF,** this Power of Attorney has been subscribed by an authorized officer or official of the Companies and the corporate seals of the Companies have been affixed thereto this 28th day of July, 2021.

LIBERTY MUTUAL INSURANCE COMPANY INCORPORATED 1912 MASSACHUSETTS — THE OHIO CASUALTY INSURANCE COMPANY INCORPORATED 1919 NEW HAMPSHIRE — WEST AMERICAN INSURANCE COMPANY INCORPORATED 1991 INDIANA

Liberty Mutual Insurance Company
The Ohio Casualty Insurance Company
West American Insurance Company

By: David M. Carey
David M. Carey, Assistant Secretary

State of PENNSYLVANIA
County of MONTGOMERY ss

On this 28th day of July, 2021 before me personally appeared David M. Carey, who acknowledged himself to be the Assistant Secretary of Liberty Mutual Insurance Company, The Ohio Casualty Company, and West American Insurance Company, and that he, as such, being authorized so to do, execute the foregoing instrument for the purposes therein contained by signing on behalf of the corporations by himself as a duly authorized officer.

**IN WITNESS WHEREOF,** I have hereunto subscribed my name and affixed my notarial seal at King of Prussia, Pennsylvania, on the day and year first above written.

TERESA PASTELLA COMMONWEALTH OF PENNSYLVANIA NOTARY PUBLIC

Commonwealth of Pennsylvania - Notary Seal
Teresa Pastella, Notary Public
Montgomery County
My commission expires March 28, 2025
Commission number 1126044
Member, Pennsylvania Association of Notaries

By: Teresa Pastella
Teresa Pastella, Notary Public

This Power of Attorney is made and executed pursuant to and by authority of the following By-laws and Authorizations of The Ohio Casualty Insurance Company, Liberty Mutual Insurance Company, and West American Insurance Company which resolutions are now in full force and effect reading as follows:

**ARTICLE IV – OFFICERS:** Section 12. Power of Attorney.
Any officer or other official of the Corporation authorized for that purpose in writing by the Chairman or the President, and subject to such limitation as the Chairman or the President may prescribe, shall appoint such attorneys-in-fact, as may be necessary to act in behalf of the Corporation to make, execute, seal, acknowledge and deliver as surety any and all undertakings, bonds, recognizances and other surety obligations. Such attorneys-in-fact, subject to the limitations set forth in their respective powers of attorney, shall have full power to bind the Corporation by their signature and execution of any such instruments and to attach thereto the seal of the Corporation. When so executed, such instruments shall be as binding as if signed by the President and attested to by the Secretary. Any power or authority granted to any representative or attorney-in-fact under the provisions of this article may be revoked at any time by the Board, the Chairman, the President or by the officer or officers granting such power or authority.

**ARTICLE XIII – Execution of Contracts:** Section 5. Surety Bonds and Undertakings.
Any officer of the Company authorized for that purpose in writing by the chairman or the president, and subject to such limitations as the chairman or the president may prescribe, shall appoint such attorneys-in-fact, as may be necessary to act in behalf of the Company to make, execute, seal, acknowledge and deliver as surety any and all undertakings, bonds, recognizances and other surety obligations. Such attorneys-in-fact subject to the limitations set forth in their respective powers of attorney, shall have full power to bind the Company by their signature and execution of any such instruments and to attach thereto the seal of the Company. When so executed such instruments shall be as binding as if signed by the president and attested by the secretary.

**Certificate of Designation** – The President of the Company, acting pursuant to the Bylaws of the Company, authorizes David M. Carey, Assistant Secretary to appoint such attorneys-in-fact as may be necessary to act on behalf of the Company to make, execute, seal, acknowledge and deliver as surety any and all undertakings, bonds, recognizances and other surety obligations.

**Authorization** – By unanimous consent of the Company's Board of Directors, the Company consents that facsimile or mechanically reproduced signature of any assistant secretary of the Company, wherever appearing upon a certified copy of any power of attorney issued by the Company in connection with surety bonds, shall be valid and binding upon the Company with the same force and effect as though manually affixed.

I, Renee C. Llewellyn, the undersigned, Assistant Secretary, The Ohio Casualty Insurance Company, Liberty Mutual Insurance Company, and West American Insurance Company do hereby certify that the original power of attorney of which the foregoing is a full, true and correct copy of the Power of Attorney executed by said Companies, is in full force and effect and has not been revoked.

**IN TESTIMONY WHEREOF,** I have hereunto set my hand and affixed the seals of said Companies this 4th day of October, 2021.

LIBERTY MUTUAL INSURANCE COMPANY INCORPORATED 1912 MASSACHUSETTS — THE OHIO CASUALTY INSURANCE COMPANY INCORPORATED 1919 NEW HAMPSHIRE — WEST AMERICAN INSURANCE COMPANY INCORPORATED 1991 INDIANA

By: Renee C. Llewellyn
Renée C. Llewellyn, Assistant Secretary

Not valid for mortgage, note, loan, letter of credit, currency rate, interest rate or residual value guarantees.

For bond and/or Power of Attorney (POA) verification inquiries, please call 610-832-8240 or email HOSUR@libertymutual.com.

LMS-12873 LMIC OCIC WAIC Multi Co 02/21

Liberty Mutual.
SURETY

ARIZONA ENDORSEMENT IN ACCORDANCE WITH *Please read carefully, this endorsement adds additional information.*

Re: Bond Number(s): **609204772**

Your agent/agency for this policy is: Willis Towers Watson Insurance Services West, Inc.

Agency/Agent Name: Debbie Mantooth

Address: 2101 6th Avenue, North, Suite 725, Birmingham, AL 35203

Phone: (205) 868-0296

All other terms and conditions of the policy remain unchanged.

Instruction for Inquiries and Notices Regarding the Bond Attached to this Endorsement:

To verify the authenticity of the bond, please call 888-844-2663 or email at bonds@libertymutual.com .

Any written notices, inquiries, claims or demands to the surety on the bond to which this endorsement is attached should be directed to:

Liberty Mutual Insurance Company
1001 4th Avenue Suite #1700
Seattle, WA 98154

Or

Email: bonds@libertymutual.com .

Please include with all notices the bond number and the name of the principal on the bond. Where a claim is being asserted, please set forth generally the basis of the claim. In the case of a payment or performance bond, please identify the project to which the bond pertains.